www.antoine-belgium.com

Antoine

Since 1932

Equipment for dispensing
and refrigerating beer

MADE IN BELGIUM

# MADE IN BELGIUM

Rue de la Bienvenue, 7-9, 1070 Bruxelles
Verwelkomingsstraat 7-9, 1070 Brussel
T +32 2 523 94 30
info@antoinebelgium.be
www.antoine-belgium.com

15 000m² of production

Green production

# Antoine

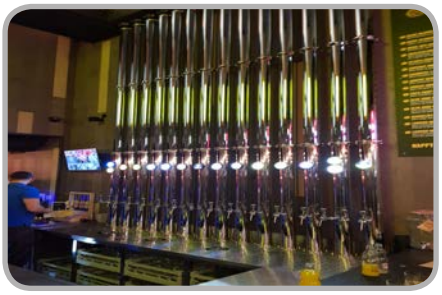

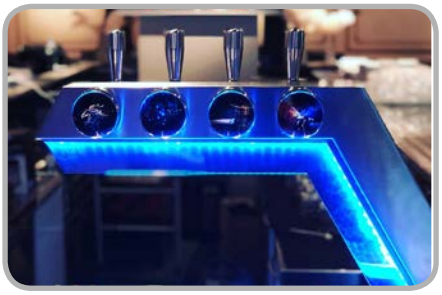

Come visit our brand new website on :

**WWW.ANTOINE-BELGIUM.COM**

From father to son
since 1932

Antoine
Antoine

# Enjoy the original tap

Dispensing towers
Advertising - Taps
4-44

Drainers, driptrays & Sinks
Counter accessories
45-48

Coolers
beer-cooler - keg-cooler-bottle-cooler
49-56

Python lines, Cleaning products
Accessories
57-58

Cleaning & coupling heads,
Pressure regulators
59-60

Party-coolers
61-67

Ice cube machines
68

# BEER TOWERS

Sphéro
**P. 6**

Master
**P. 7**

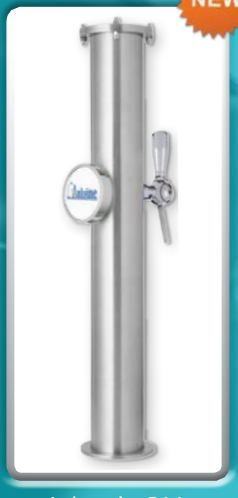

Atlantis GM
**P.8**

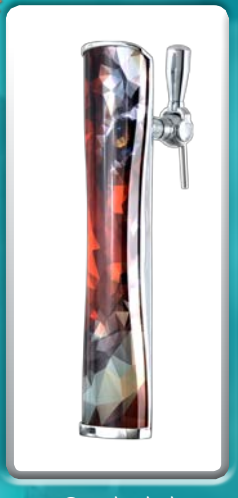

Starled xl
**P. 9**

USA
**P. 10**

Quadro wood
**P.11**

Brisbane
**P. 12**

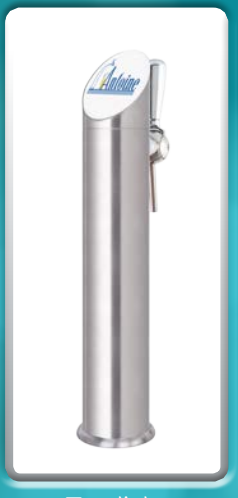

Top light
**P. 13**

Holland
**P. 14**

Maxima
**P. 15**

New-Anfo
**P. 16**

Smash
**P. 17**

Naja
**P. 18**

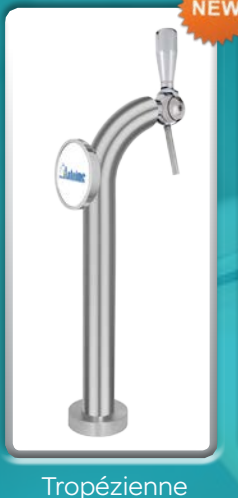

Tropézienne
**P. 19**

Ellipse vendome
**P. 19**

Dubaï
**P. 20**

Malt
**P. 21**

Vogue
**P. 22**

Smoking
**P. 23**

Dubai-Bridge
**P. 24**

Falcon
**P. 25**

Parisian
**P. 26**

Texas
**P. 27**

Mercure
**P. 27**

NEW

Condor black
**P. 28**

Tropique - Vinci
**P. 29**

NEW

Sydney
**P. 30**

Seven
**P. 30**

Canberra
**P. 31**

Melbourne
**P. 31**

Brisbane
**P. 32 - 33**

Bi-metal
**P. 34**

NEW

Atlantis
**P. 34**

NEW

Zeta
**P. 35**

Delta
**P. 36**

Come discover our portofolio on our new website : WWW.ANTOINE-BELGIUM.COM

# SPHÉRO 60

1 tap

Brushed Stainless steel

Option Illumination LED
Ø 69 - Ø 82

Refrigerated

1/2" - 5/8"

IVORY
(RAL9001)

ANTHRACITE
(RAL 9004)

BRUSHED STAINLESS STEEL

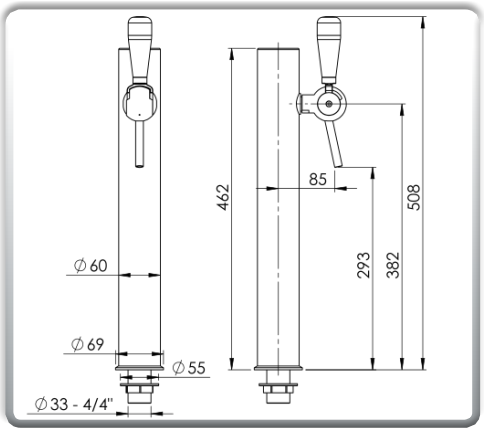




ANTOINE ©

Non-contractual photos

# MASTER

BRUSHED STAINLESS STEEL

ANTHRACITE
(RAL 9004)

1 tap

Brushed
Stainless steel

Option
Illumination LED
Ø 69 - Ø 82 mm

Refrigerated

1/2" - 5/8"

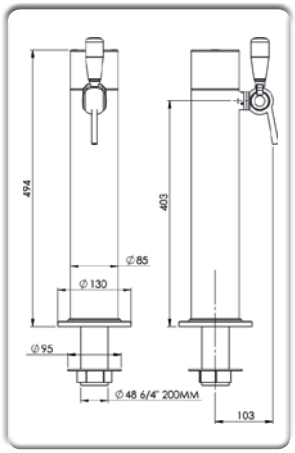




Non-contractual photos

© ANTOINE

NEW

# ATLANTIS GM

1 tap

Brushed
Stainless steel

Option
Illumination LED
Ø 69 - Ø 82 mm

Refrigerated

1/2" - 5/8"

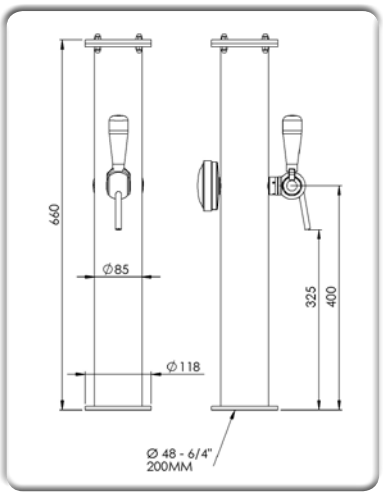




ANTOINE ©

Non-contractual photos

# STARLED XL

1 tap

Chromed brass

Illumination LED

Refrigerated

1/2" - 5/8"

**Customise your tower**
Send us your logo in Adobe Illustrator format.

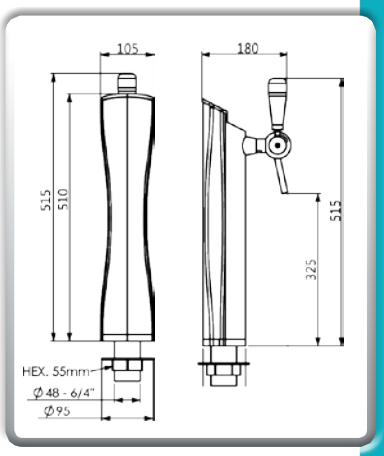




Non-contractual photos

© ANTOINE

# USA

1 - 2 taps

Polished stainless steel
Brushed stainless steel
Polish brass

Option
Illumination LED
Ø 69 - Ø 82

Refrigerated

1/2" - 5/8"

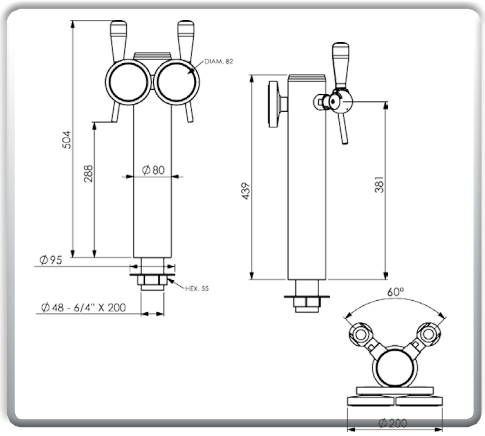




ANTOINE ©

Non-contractual photos

# QUADRO WOOD

1 tap

Brushed stainless steel
Wengé
light oak

Option
Illumination LED
Ø 69

Refrigerated

1/2" - 5/8"

Wengé

Chêne clair - licht eiken

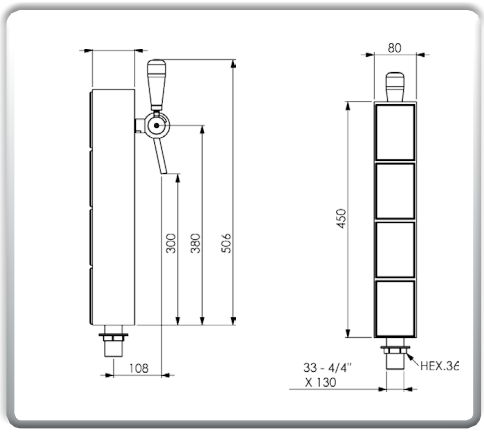


Non-contractual photos

© ANTOINE

# BRISBANE

1 - 2 taps

Polished stainless steel

Option
Illumination LED
Ø 69 - Ø 82

Refrigerated

1/2" - 5/8"

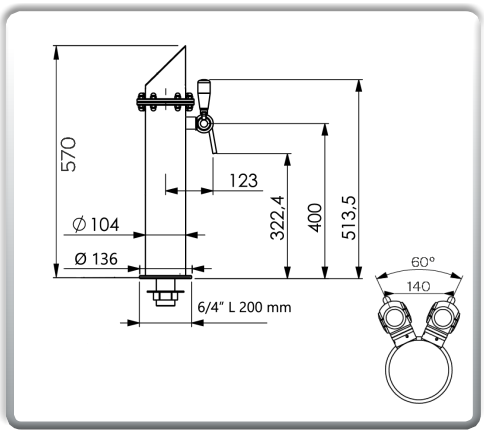



ANTOINE ©
Non-contractual photos

# TOP LIGHT

NEW

1 - 2 taps

Brushed stainless steel

Option (max 1)
LED Illumination

Refrigerated

1/2" - 5/8"

RED
(RAL 3001)

BRUSHED
STAINLESS STEEL

ANTHRACITE
(RAL 9004)

Illumination LED

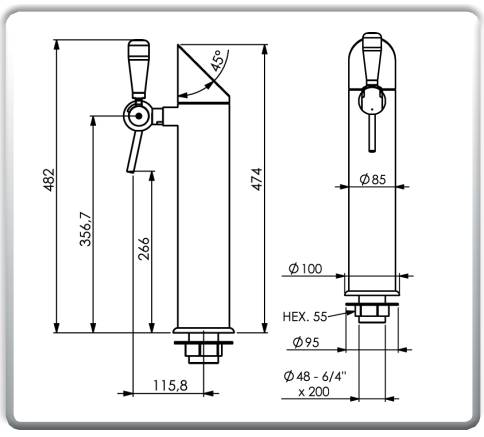


Non-contractual photos

© ANTOINE

# HOLLAND

1 - 2 taps

Chromed brass
Polished brass

Option
1 x Illumination
LED Ø 69 - Ø 82

Refrigerated

1/2" - 5/8"

With 2 taps

With illumination Ø 69

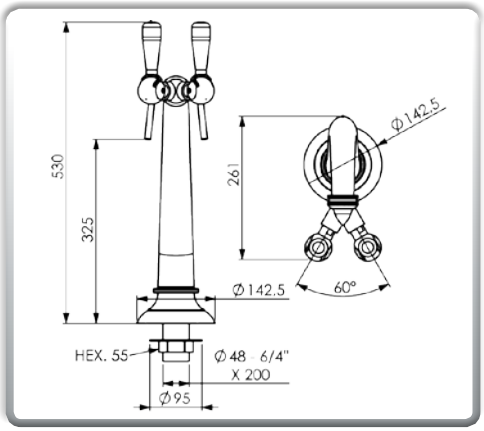

ANTOINE ©

Non-contractual photos

# MAXIMA

- 1 - 3 taps
- Chromed brass
- Illumination LED
  Ø 82
- Refrigerated
- 1/2" - 5/8"

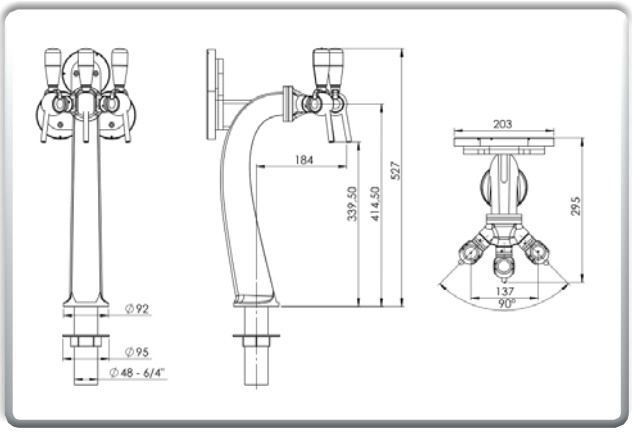




Non-contractual photos

© ANTOINE

# NEW ANFO

1 -2 taps

Chromed brass
Anthracite
Satin brass

Option
Illumination LED
Ø 69 - Ø 82

refrigerated

1/2" - 5/8"

SATIN BRASS

NEW

ANTHRACITE
(RAL 9004)

CHROMED
BRASS

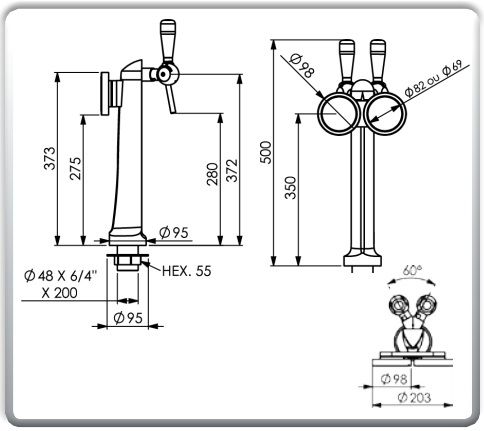




ANTOINE ©

Non-contractual photos

# SMASH

1 - 2 taps

Chromed
Anthracite
Satin brass

Option (max 1)
Illumination LED

refrigerated

1/2" - 5/8"

CHROMED

ANTHRACITE
(RAL 9004)

SATIN BRASS

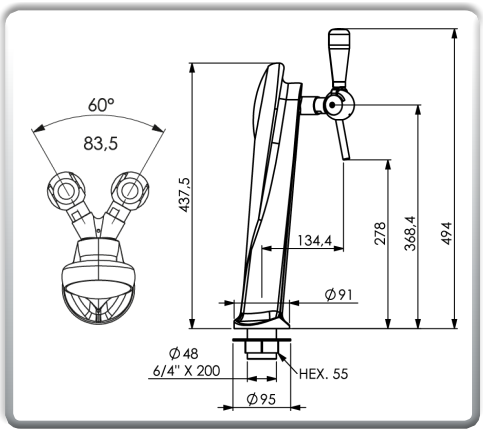


Non-contractual photos

© ANTOINE

# NAJA

1 - 4 taps

Chromed brass

Not illuminated

Refrigerated

1/2" - 5/8"

ANTHRACITE
(RAL 9004)

SATIN BRASS

CHROMED

ITALIAN RED ON REQUEST

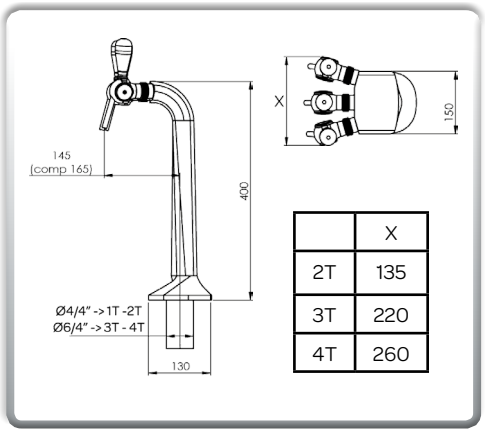


| | X |
|---|---|
| 2T | 135 |
| 3T | 220 |
| 4T | 260 |



ANTOINE ©

Non-contractual photos

# TROPÉZIENNE

1 tap

Brushed stainless steel

Option
LED Ø 69 - Ø 82

Refrigerated

1/2" - 5/8"

NEW

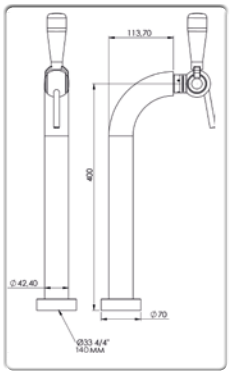


# ELLIPSE VENDÔME

3 - 4 taps

Sandblasted stainless steel

1/2" - 5/8"

Option
Illumination LED
2 max Ø69 - Ø82

Refrigerated

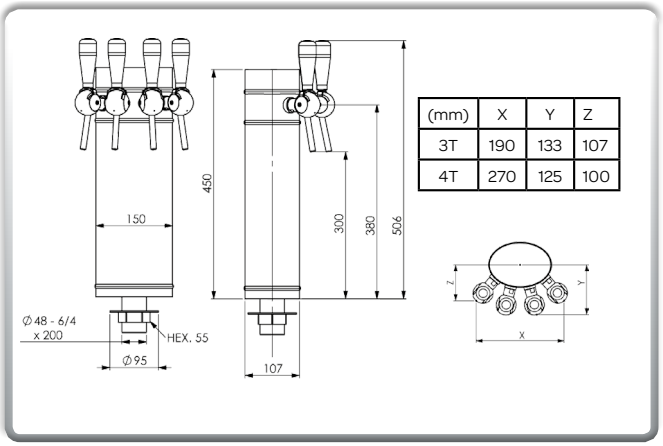


| (mm) | X | Y | Z |
|---|---|---|---|
| 3T | 190 | 133 | 107 |
| 4T | 270 | 125 | 100 |

Non-contractual photos

© ANTOINE

# DUBAÏ

1 - 7 taps

Brushed stainless steel

LED LIGHT
RGB : arm + top

Option
Illumination LED
Ø69 - Ø82 mm

Refrigerated

1/2" - 5/8"

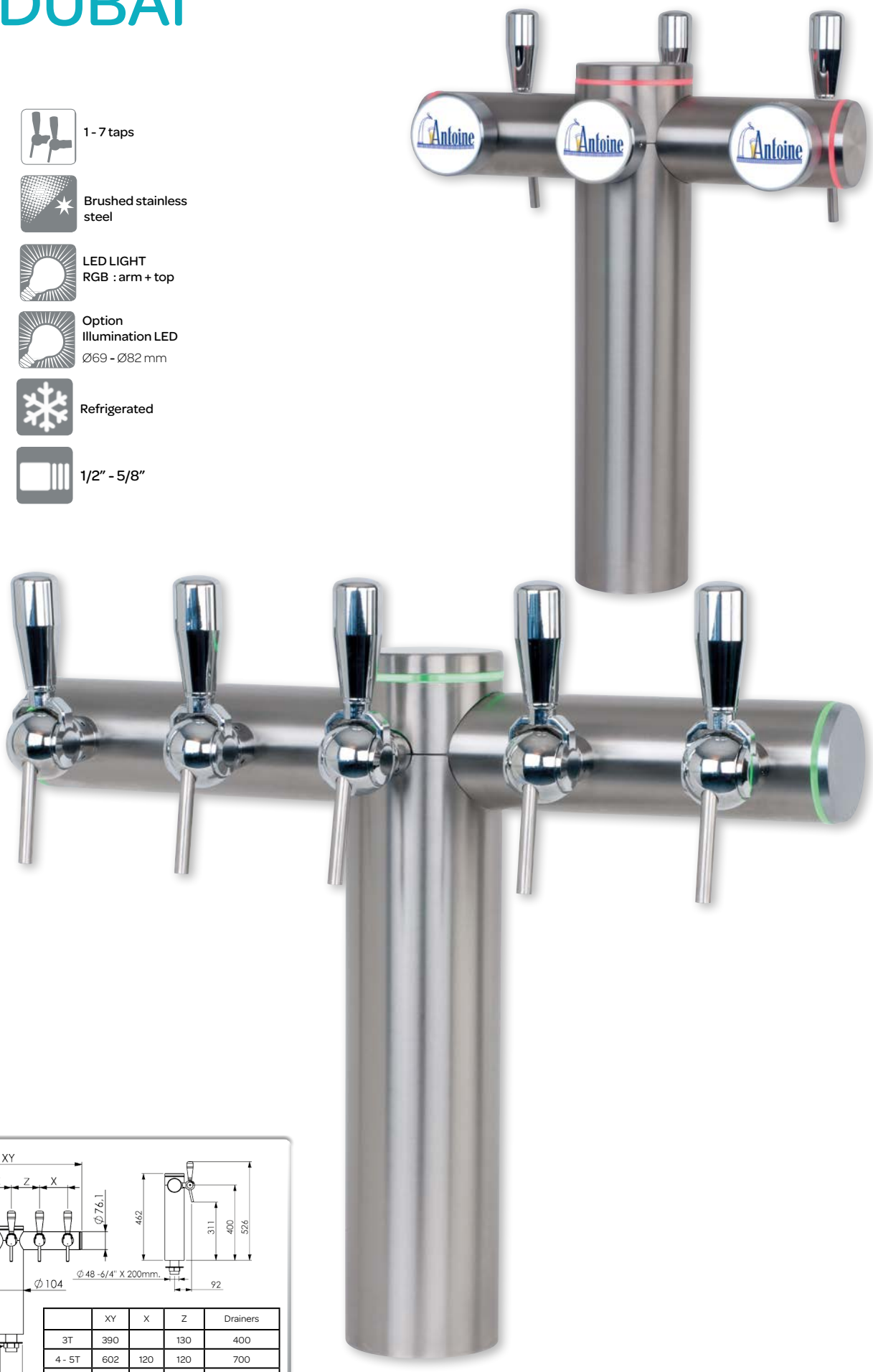


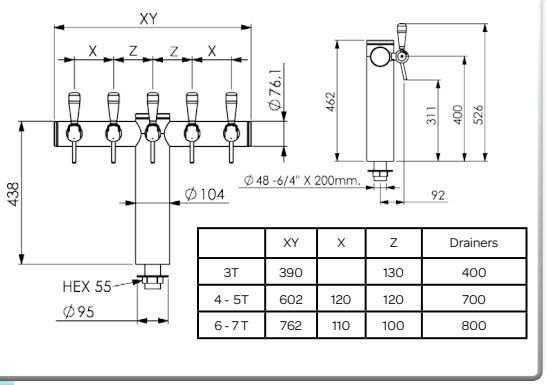


| | XY | X | Z | Drainers |
|---|---|---|---|---|
| 3T | 390 | | 130 | 400 |
| 4 - 5T | 602 | 120 | 120 | 700 |
| 6 - 7T | 762 | 110 | 100 | 800 |

# MALT

NEW

- 5 - 8 taps
- Brushed stainless steel
- Option
  LED illumination
  Ø 69 - Ø 82
- Refrigerated
- 1/2" - 5/8"

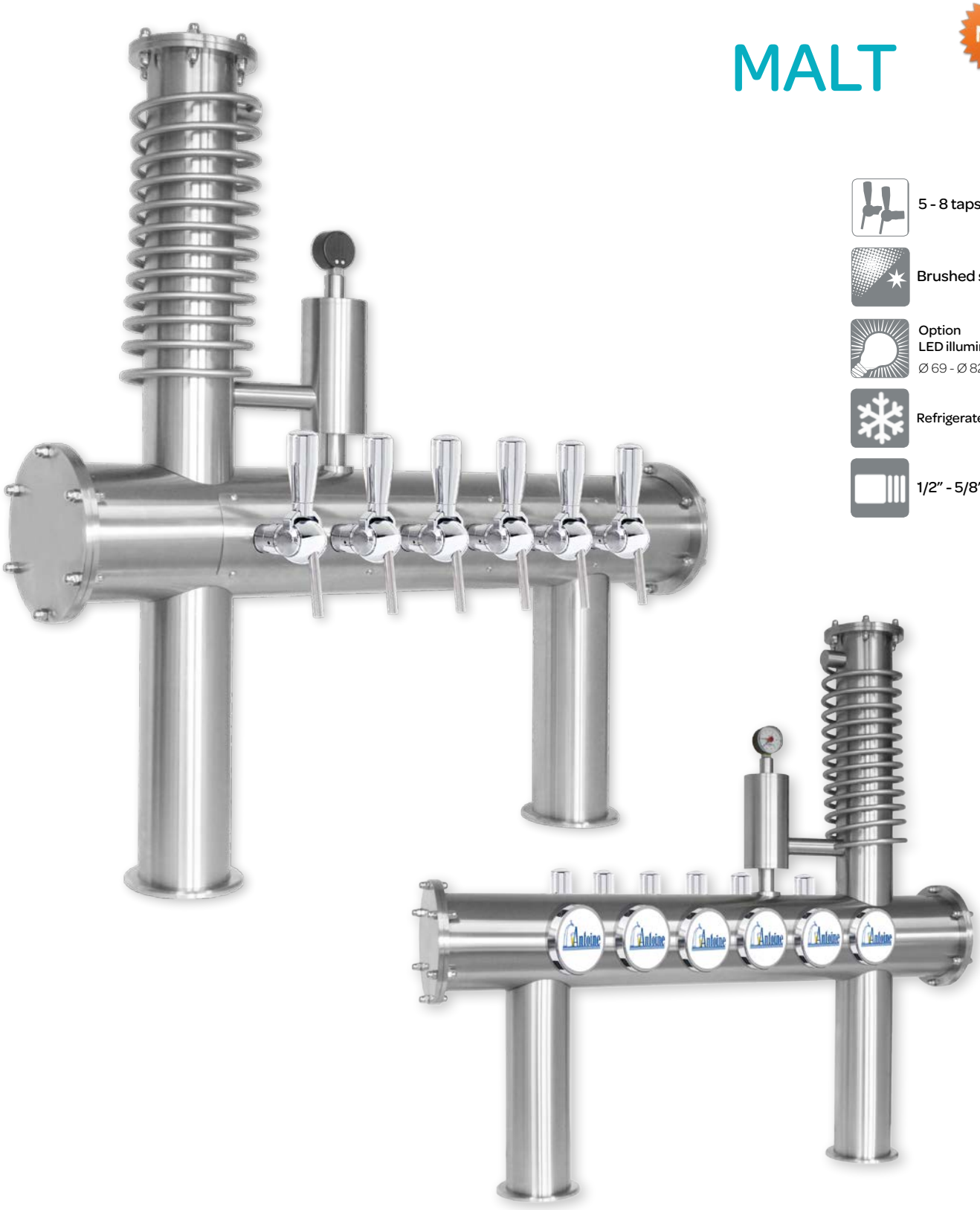

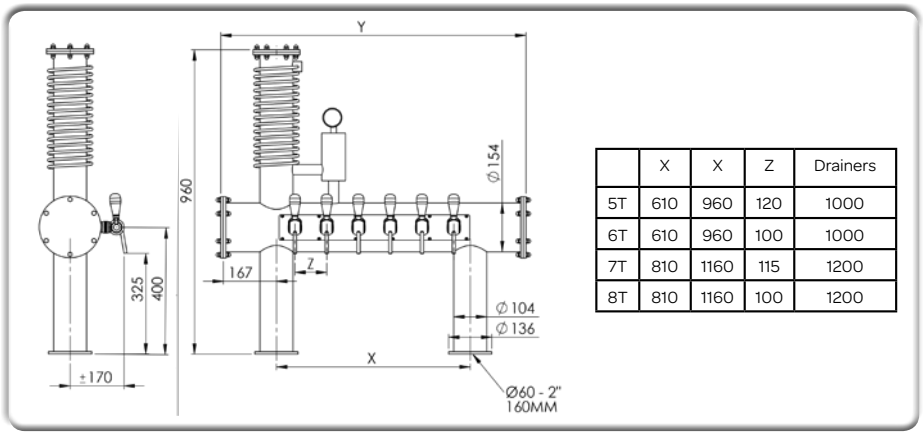


| | X | X | Z | Drainers |
|---|---|---|---|---|
| 5T | 610 | 960 | 120 | 1000 |
| 6T | 610 | 960 | 100 | 1000 |
| 7T | 810 | 1160 | 115 | 1200 |
| 8T | 810 | 1160 | 100 | 1200 |



Non-contractual photos

© ANTOINE

# VOGUE

3 - 5 taps
right foot standard
left foot on request

brushed and polished
stanless steel
other finish on request

OPTION ILL.
LED Ø69 - 82

LED RGB on Tower
On request

refrigerated

1/2" - 5/8"

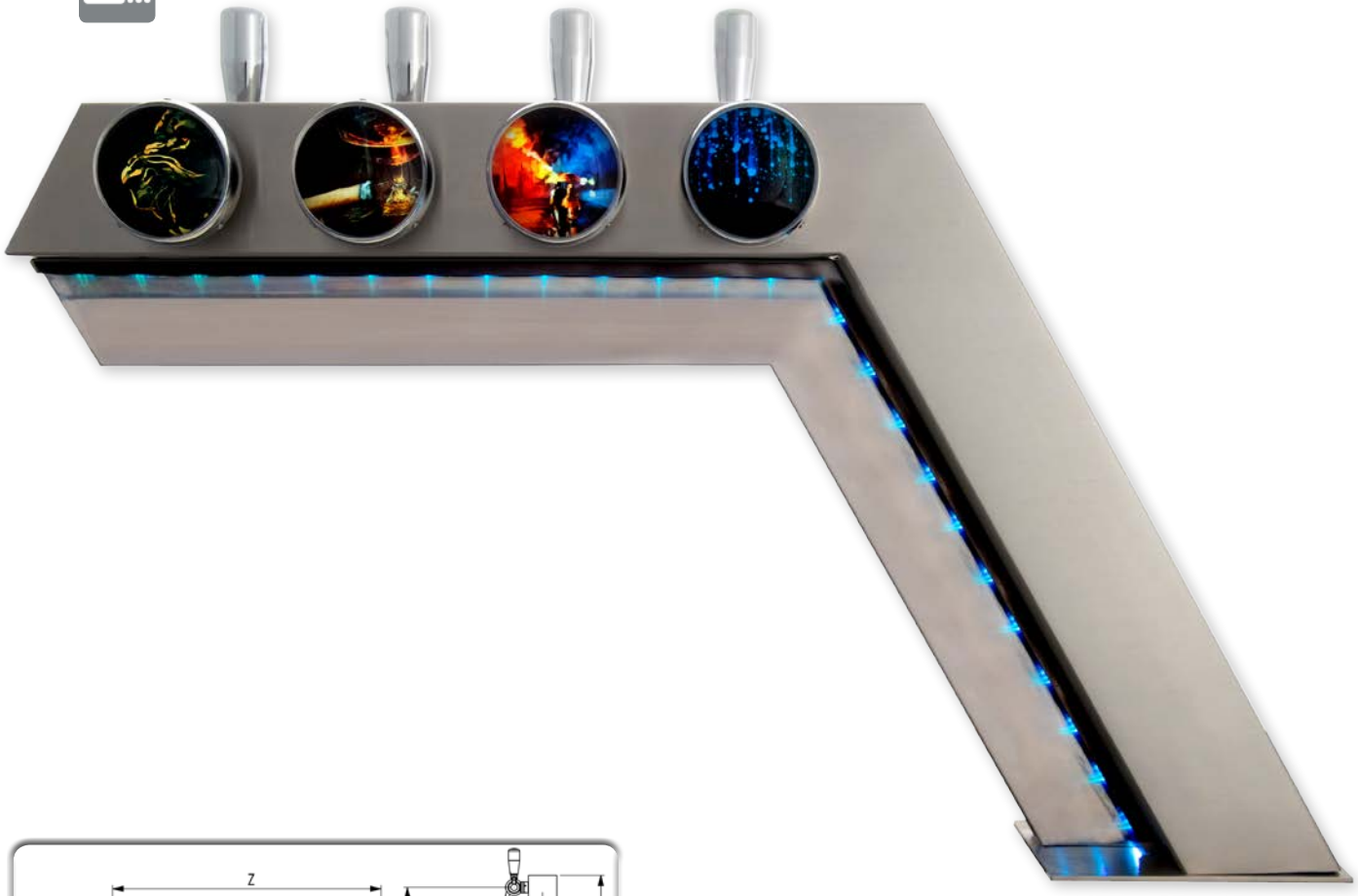

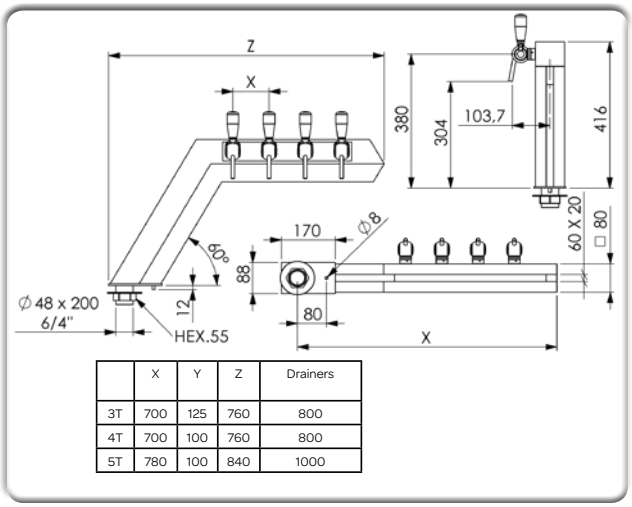


| | X | Y | Z | Drainers |
|---|---|---|---|---|
| 3T | 700 | 125 | 760 | 800 |
| 4T | 700 | 100 | 760 | 800 |
| 5T | 780 | 100 | 840 | 1000 |



ANTOINE ©

Non-contractual photos

# SMOKING

3 - 5 taps

Ivory
Anthracite

Illumination LED
RGB : arm + top

Option
Illumination LED
Ø 69 - Ø 82

Refrigerated

1/2" - 5/8"

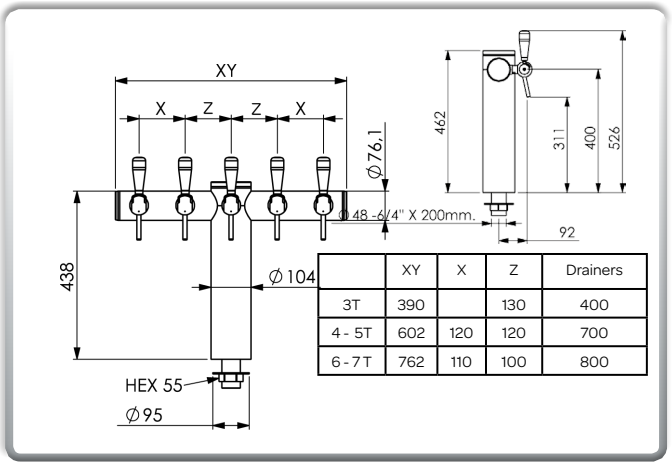


| | XY | X | Z | Drainers |
|---|---|---|---|---|
| 3T | 390 | | 130 | 400 |
| 4 - 5T | 602 | 120 | 120 | 700 |
| 6 - 7T | 762 | 110 | 100 | 800 |

Non-contractual photos

© ANTOINE

# DUBAÏ - PONT

8 -10 taps

Brushed stainless steel

Illumination LED
RGB : arm + top

Option
Illumination
LED Ø 69 - Ø 82

Refrigerated

1/2" - 5/8"

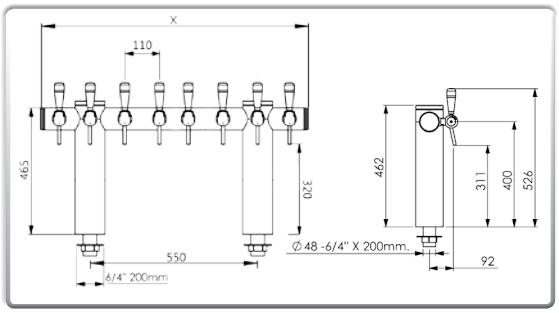


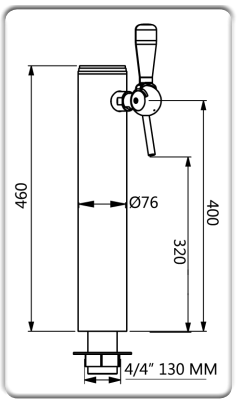

DUBÏ 1T
BRUSHED

SMOKING 1T
ANTHRACITE
RAL 9004


ANTOINE ©
Non-contractual photos

# FALCON

3 - 5 taps

Chromed brass
Pearlchrome
Gold plated

Option
Illumination LED
Ø 69 - Ø 82

Refrigerated

1/2" - 5/8"

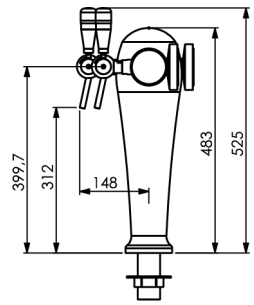


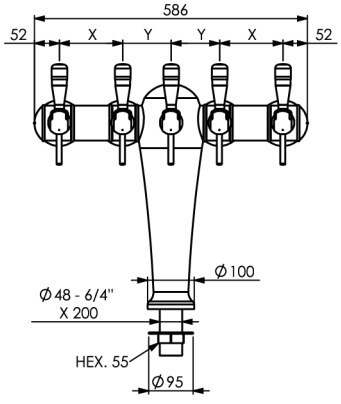


| | X | Y | Drainers |
|---|---|---|---|
| 3T | - | 170 | 500 |
| 5T | 136 | 104 | 600 |

Non-contractual photos

© ANTOINE

# PARISIENNE

1 - 9 taps

Chromed brass
Polished brass

Option
Illumination LED
Ø 69 - Ø 82

Refrigerated

1/2" - 5/8"

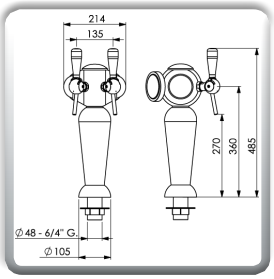


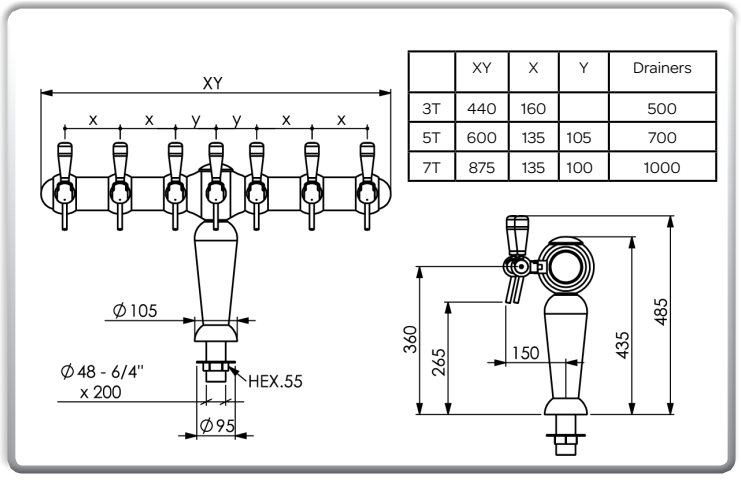


| | XY | X | Y | Drainers |
|---|---|---|---|---|
| 3T | 440 | 160 | | 500 |
| 5T | 600 | 135 | 105 | 700 |
| 7T | 875 | 135 | 100 | 1000 |

ANTOINE ©

Non-contractual photos

# MERCURE

3 - 7 taps

Chromed brass
Sandblasted chrome

Option
LED illumination
Ø 69 - Ø 82

Refrigerated

1/2" - 5/8"

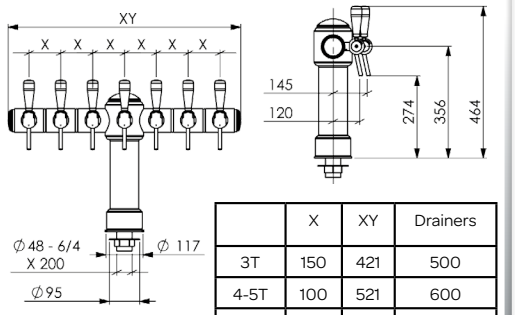


| | X | XY | Drainers |
|---|---|---|---|
| 3T | 150 | 421 | 500 |
| 4-5T | 100 | 521 | 600 |
| 6-7T | 100 | 720 | 800 |

# TEXAS

3 - 5 taps

Polished SS

Option
Illumination LED
Ø 69 - Ø 82

Refrigerated

1/2" - 5/8"

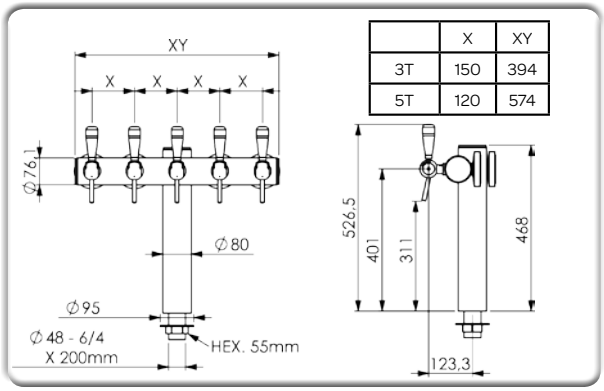


| | X | XY |
|---|---|---|
| 3T | 150 | 394 |
| 5T | 120 | 574 |



Non-contractual photos

© ANTOINE

# CONDOR

## BLACK

3 - 5 taps

Anthracite

Option
Illumination LED
Ø 82

Refrigerated

1/2" - 5/8"

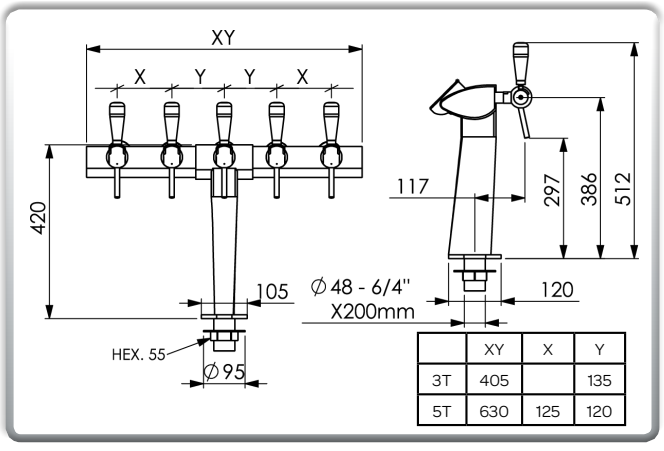


| | XY | X | Y |
|---|---|---|---|
| 3T | 405 | | 135 |
| 5T | 630 | 125 | 120 |



ANTOINE ©

Non-contractual photos

# TROPIQUE

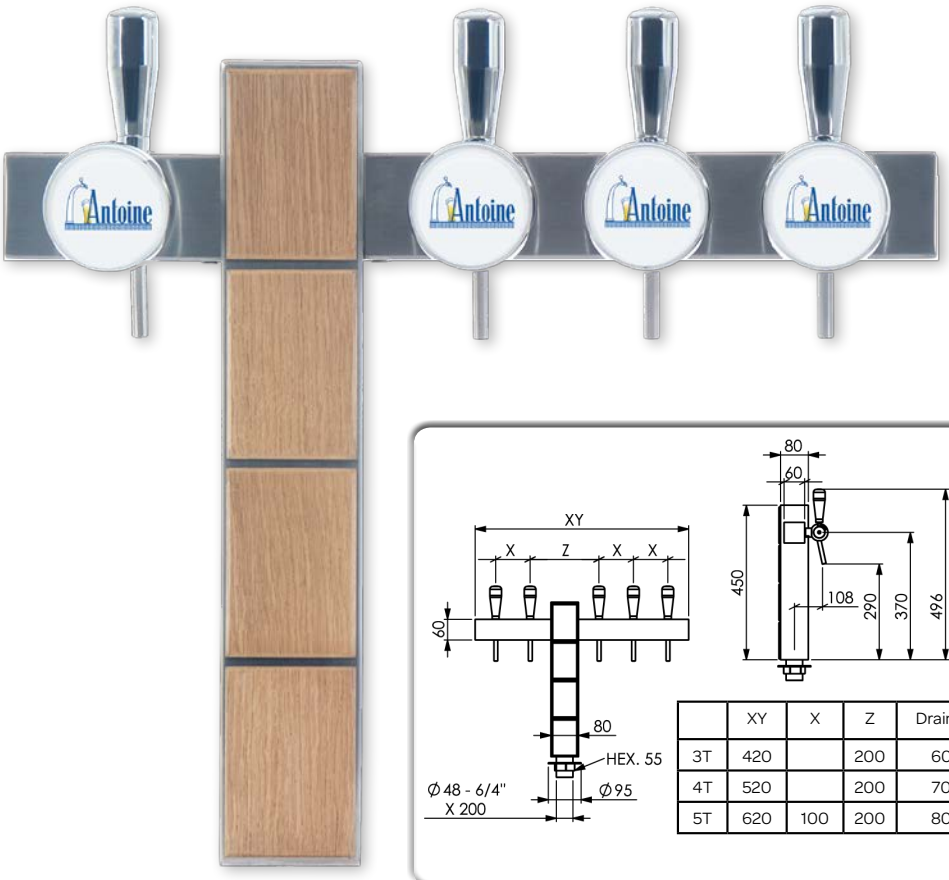

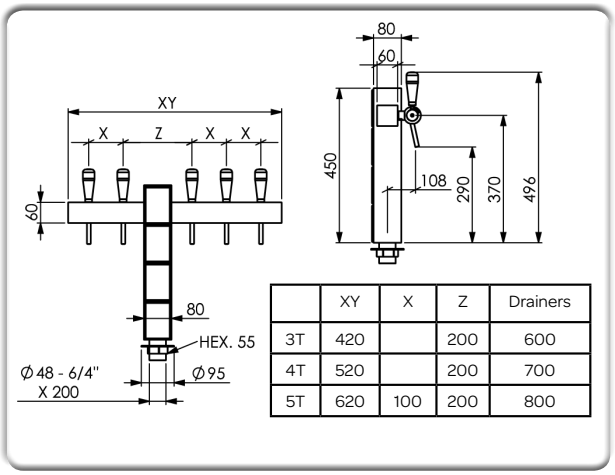


| | XY | X | Z | Drainers |
|---|---|---|---|---|
| 3T | 420 | | 200 | 600 |
| 4T | 520 | | 200 | 700 |
| 5T | 620 | 100 | 200 | 800 |

3 - 5 taps

Brushed st. steel
WENGÉ OR LIGHT OAK

Optiion illumination
LED Ø69 - Ø82

Refrigerated

1/2" - 5/8"

# AMAZONE

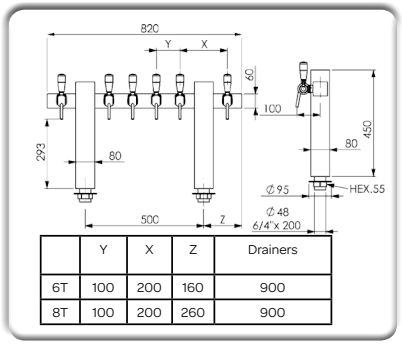


| | Y | X | Z | Drainers |
|---|---|---|---|---|
| 6T | 100 | 200 | 160 | 900 |
| 8T | 100 | 200 | 260 | 900 |

6-8 taps

Brushed st. steel
WENGÉ OR LIGHT OAK

OPT. ILL.
LED Ø82 - Ø69

Refrigerated



Non-contractual photos

© ANTOINE

NEW

# SYDNEY

- 4 - 7 taps
- Polished SS
- Option
  LED illumination
  Ø69 - Ø82
- Refrigerated
- 1/2" - 5/8"

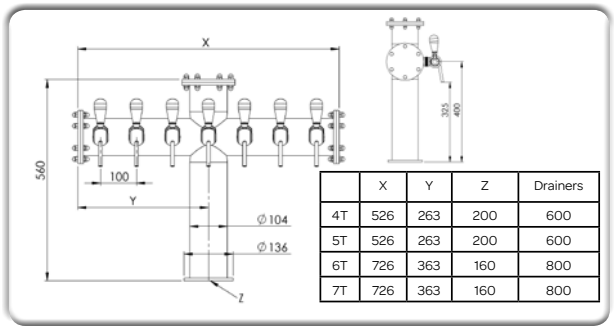


| | X | Y | Z | Drainers |
|---|---|---|---|---|
| 4T | 526 | 263 | 200 | 600 |
| 5T | 526 | 263 | 200 | 600 |
| 6T | 726 | 363 | 160 | 800 |
| 7T | 726 | 363 | 160 | 800 |

# SEVEN

- 4 - 6 taps
- Polished SS
- Option
  LED illumination
  Ø69 - Ø82
- Refrigerated
- 1/2" - 5/8"

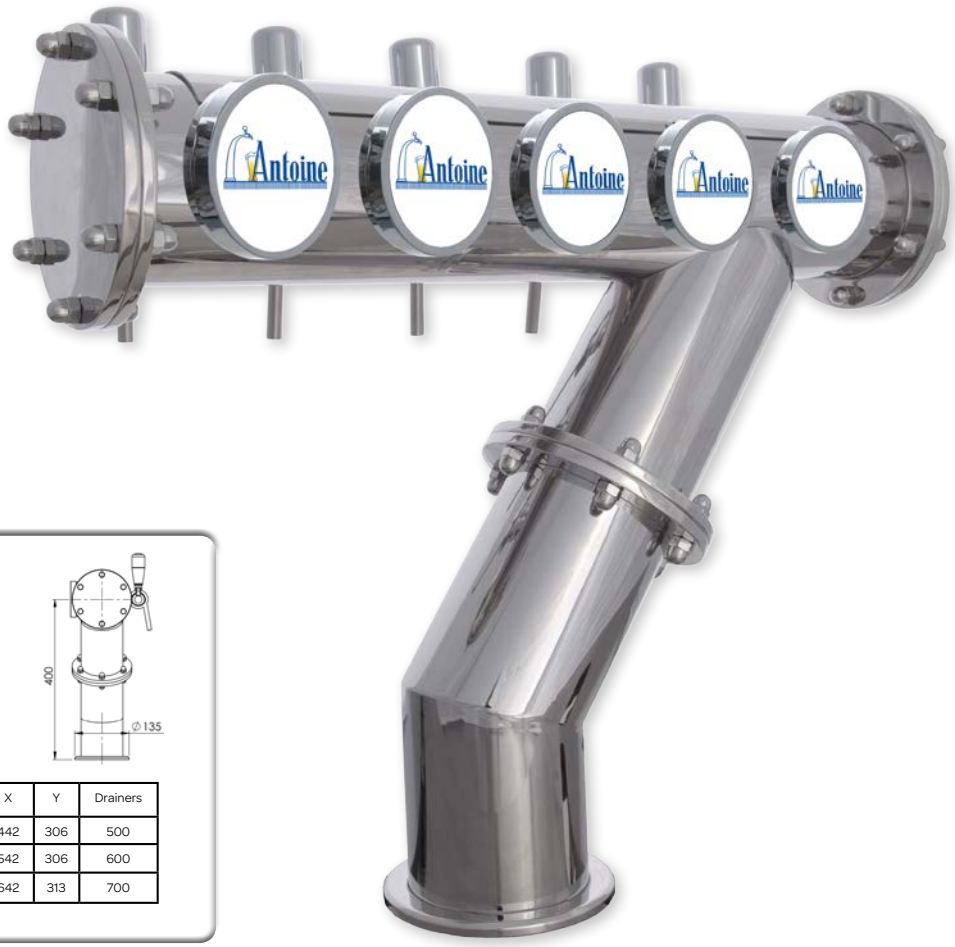


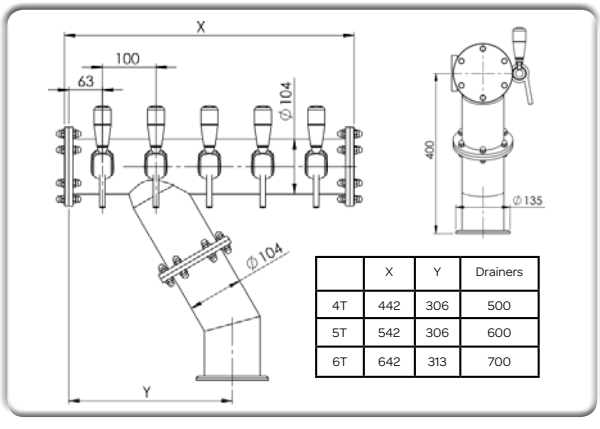


| | X | Y | Drainers |
|---|---|---|---|
| 4T | 442 | 306 | 500 |
| 5T | 542 | 306 | 600 |
| 6T | 642 | 313 | 700 |


ANTOINE ©
Non-contractual photos

# CANBERRA

3 - 5 taps

Polished stainless steel

Option
Illumination LED
Ø69 - Ø82

Refrigerated

1/2" - 5/8"




| | X | Y | Drainers |
|---|---|---|---|
| 3T | 130 | 537 | 700 |
| 4T | 100 | 537 | 700 |
| 5T | 100 | 657 | 800 |

# MELBOURNE

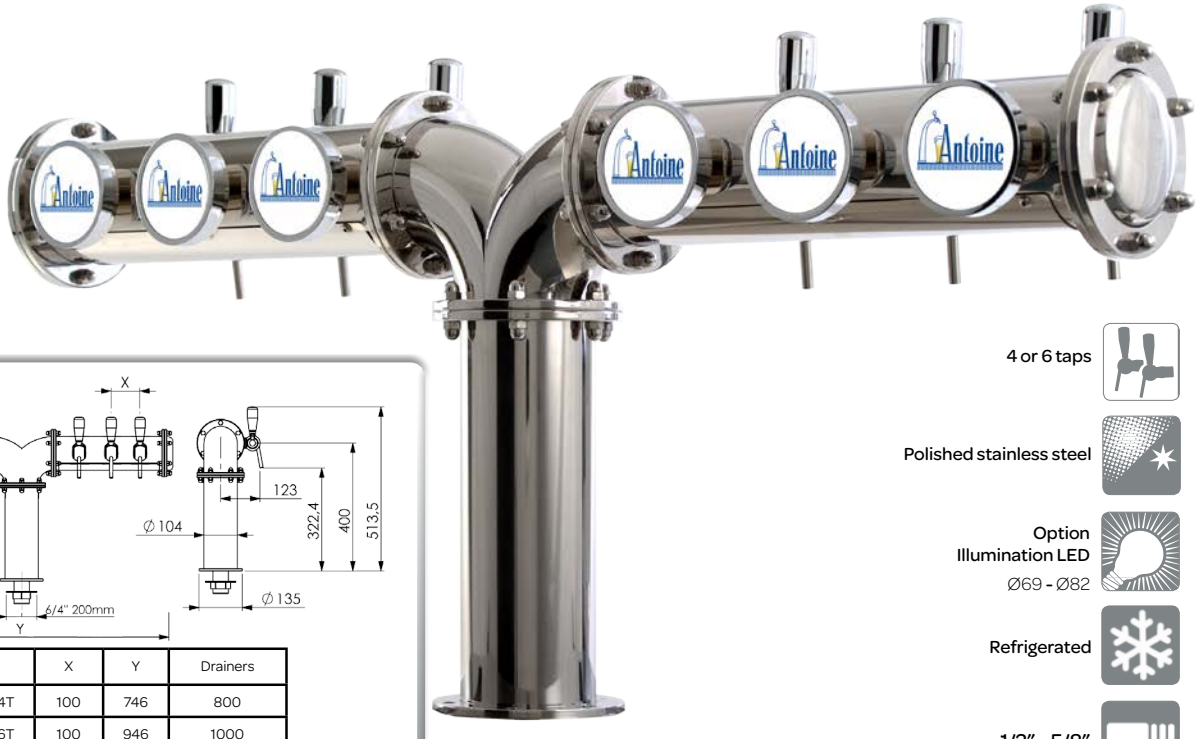


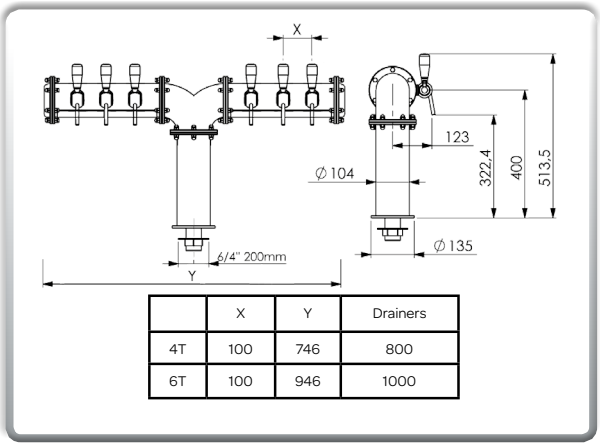


| | X | Y | Drainers |
|---|---|---|---|
| 4T | 100 | 746 | 800 |
| 6T | 100 | 946 | 1000 |

4 or 6 taps

Polished stainless steel

Option
Illumination LED
Ø69 - Ø82

Refrigerated

1/2" - 5/8"



Non-contractual photos

© ANTOINE

# BRISBANE

4 - 12 taps

Polished st. steel
Brushed st. steel

Option
Illumination LED
Ø69 - Ø82

Refrigerated

1/2" - 5/8"

RED FLAME FINISH & "VINTAGE" PUB HOLDERS ON REQUEST

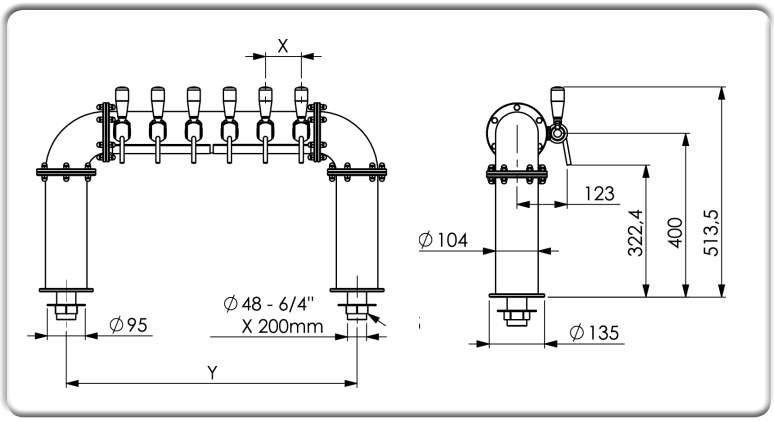




Non-contractual photos

MORE POSSIBILITIES ON PAGE 38

"BULLET GREY" FINISH UPON REQUEST

| | X | Y | Drainers |
|---|---|---|---|
| 4T | 100 | 610 | 800 |
| 5T | 120 | 810 | 1000 |
| 6T | 100 | 810 | 1000 |
| 7T | 115 | 1010 | 1200 |
| 8T | 100 | 1010 | 1200 |
| 10T | 100 | 1210 | 1400 |
| 12T | 100 | 1416 | 1600 |





© ANTOINE

# BI METAL

Small foot UPON REQUEST

3 - 10 taps | Brushed with polished rings | Option illumination LED Ø69 - 82 mm | Refrigerated | 1/2" - 5/8"

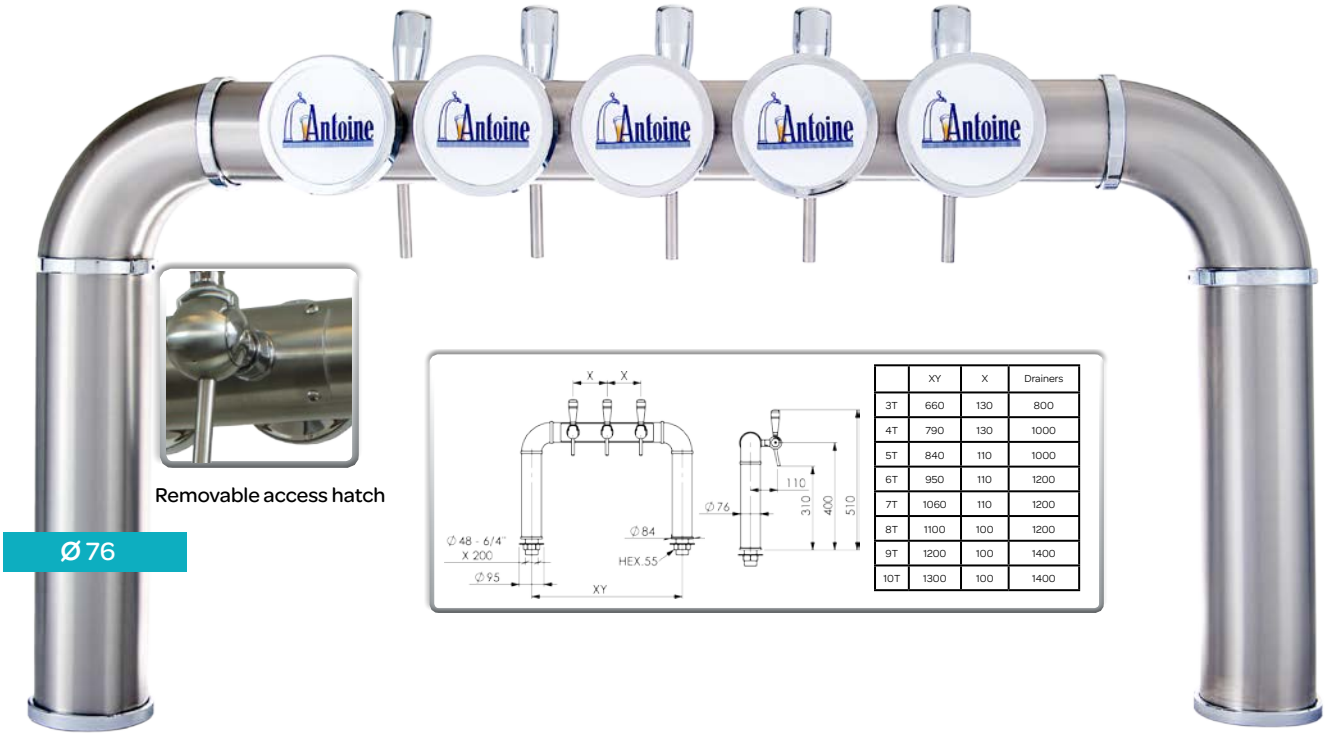



Removable access hatch

Ø 76




| | XY | X | Drainers |
|---|---|---|---|
| 3T | 660 | 130 | 800 |
| 4T | 790 | 130 | 1000 |
| 5T | 840 | 110 | 1000 |
| 6T | 950 | 110 | 1200 |
| 7T | 1060 | 110 | 1200 |
| 8T | 1100 | 100 | 1200 |
| 9T | 1200 | 100 | 1400 |
| 10T | 1300 | 100 | 1400 |

# ATLANTIS

3 - 8 taps | Brushed stainless steel | Option Illumination LED Ø 69 - Ø 82 | Refrigerated | 1/2" - 5/8"

NEW

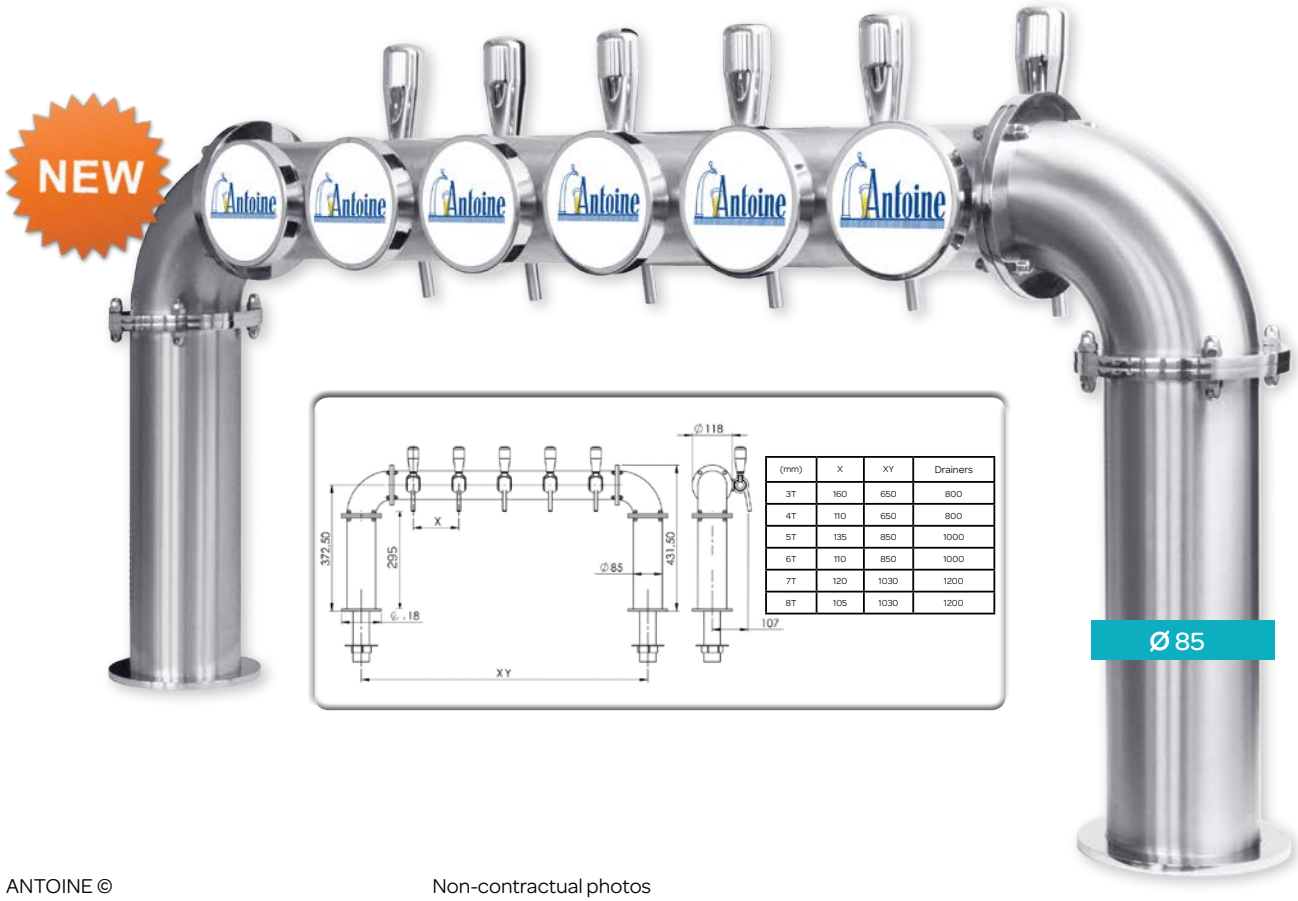




| (mm) | X | XY | Drainers |
|---|---|---|---|
| 3T | 160 | 650 | 800 |
| 4T | 110 | 650 | 800 |
| 5T | 135 | 850 | 1000 |
| 6T | 110 | 850 | 1000 |
| 7T | 120 | 1030 | 1200 |
| 8T | 105 | 1030 | 1200 |

Ø 85



ANTOINE ©

Non-contractual photos

# ZETA

NEW

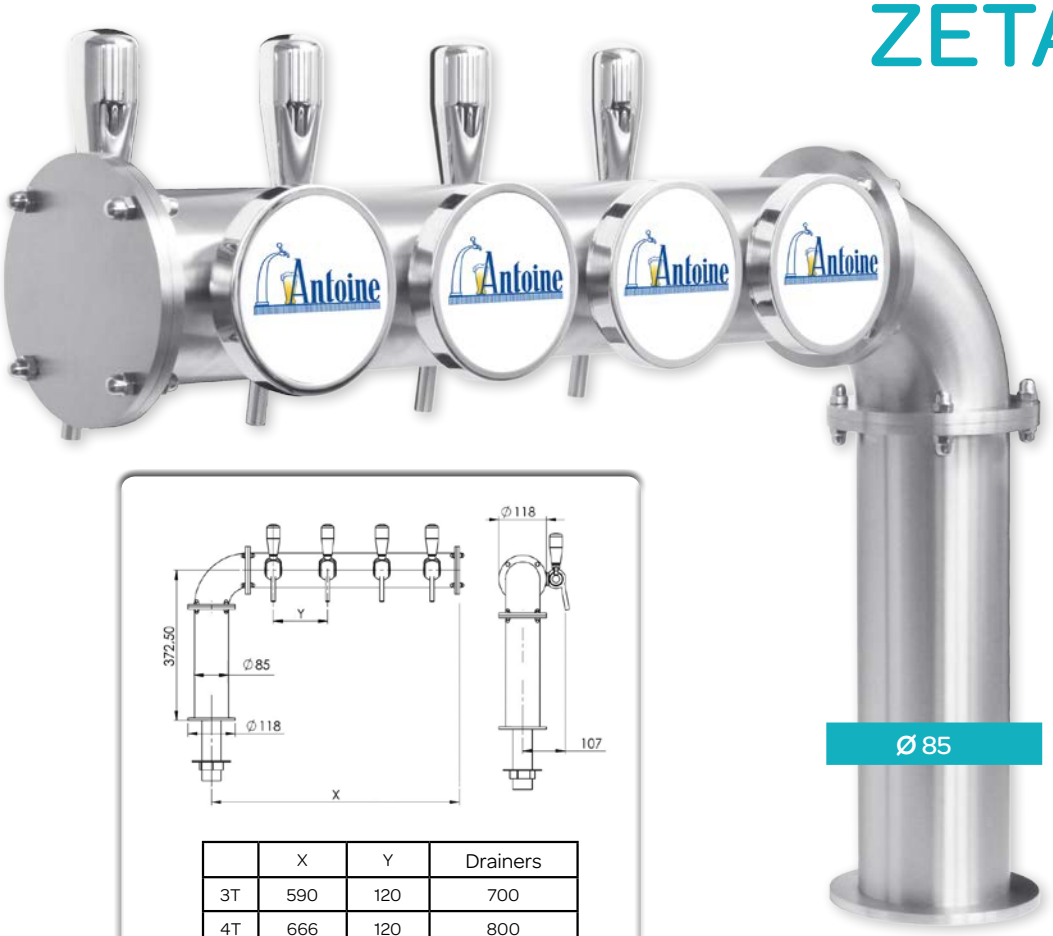


3 - 5 taps reversible

Brushed st.steel

Option illumination LED Ø69 - 82 mm

Refrigerated

1/2" - 5/8"

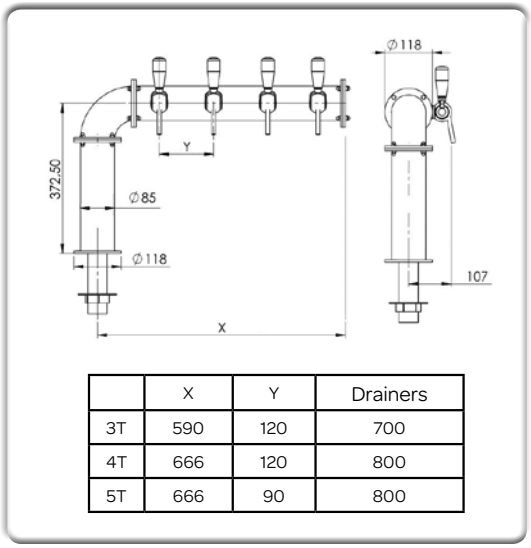


| | X | Y | Drainers |
|---|---|---|---|
| 3T | 590 | 120 | 700 |
| 4T | 666 | 120 | 800 |
| 5T | 666 | 90 | 800 |

# AQUA

1 tap

Brushed stainless steel

Not illuminated sticker included

not refrigerated

1/2" - 5/8"

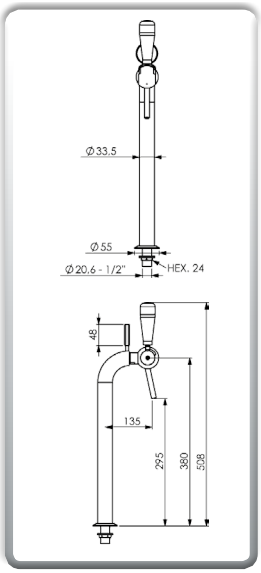


Non-contractual photos

© ANTOINE

# DELTA SINCENY - ACAJOU

3 - 5 taps

Chromed brass
Brass polished

Option
LED illumination
Ø69 - Ø82

Refrigerated

1/2" - 5/8"

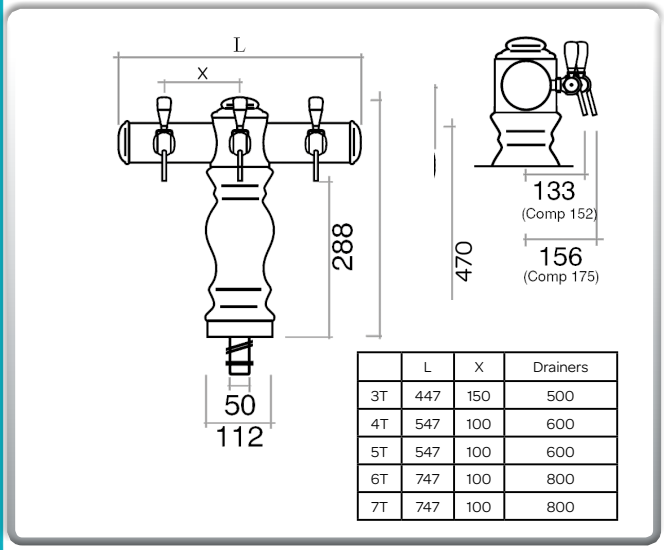


| | L | X | Drainers |
|---|---|---|---|
| 3T | 447 | 150 | 500 |
| 4T | 547 | 100 | 600 |
| 5T | 547 | 100 | 600 |
| 6T | 747 | 100 | 800 |
| 7T | 747 | 100 | 800 |



Polished brass



Non-contractual photos

# SPECIAL BRISBANE

Upon request

Non-contractual photos

© ANTOINE

# ANTIQUE TOWERS

Upon request

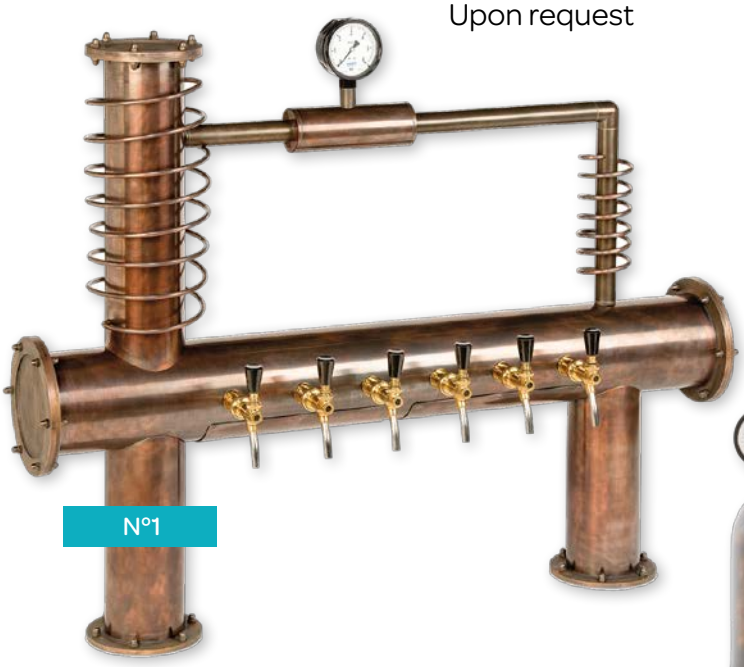

N°1

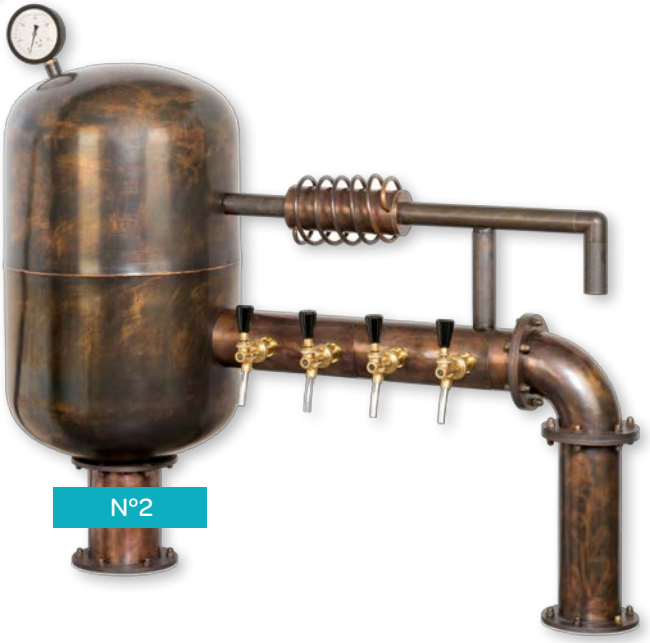

N°2

NEW

N°3

NEW

N°4

**Our standard towers are also available in other finishes upon request.**

# PLUMBING TOWERS

Non-contractual photos

© ANTOINE

# Some of our creations :

Beam tower

Number of taps max. 8

Faro : 1 tap

Seven Black

Beam 1 tap

Sphéro Wood Rusty look



ANTOINE ©

Non-contractual photos

# ADVERTISING

Lens Fish eyes Ø69

Lens fish eyes Ø82

Flat lens Ø82

- Round illuminated fish eye lens Ø 69 mm
- Round pub holder fish eye lens Ø 82 mm
- Round pub holder flat lens Ø 82 mm

# PUBLICITY HOLDERS

| | Ref | Description |
|---|---|---|
| | 186C010*00000<br>n° 10 | Stainless steel<br>Rond: Ø 80<br>ou 70 mm |
| | 186C009*00000<br>n° 9 | Stainless steel<br>Oval - Vertical<br>Width : 63 mm<br>Height : 75 mm |

- Round pub holder for stickers Ø 48 mm

| Description | |
|---|---|
| 186C000*W0000 | CHALKBOARD |

# CLAMPS

| Description |
|---|
| 167C000*00000 - Clams N°1 5/4 - 4/4 |
| 169C000*00000 - Clams N°3 5/4 - 4/4 + Drainer 400x180 mm |

Clamps N°1

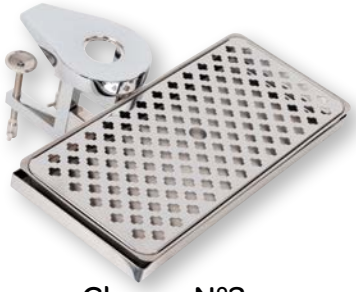

Clamps N°3

*Customised clams are available on demand (DUOCLAMS,...)





© ANTOINE

# DEBITAP

| Reference | Description |
|---|---|
| 171C000*00401 | debitap<br>Titanium gold |
| 171C000*00001 | debitap<br>polished stainless steel |
| 171C101*55101 | debitap<br>polished stainless steel<br>dented rear connection |
| 171C072*00101 | debitap<br>polished stainless steel<br>flare |

# DEBITAP SUPERFLOW

| Reference | Description |
|---|---|
| 176C000*00006 | debitap superflow<br>12 mm thread 1/2" - 5/8"<br>Titanium gold |
| 176C000*00001 | debitap superflow<br>polished stainless steel<br>12 mm thread 1/2"- 5/8" |
| 176C201*00001 | debitap superflow with foam maker for beer or nitro coffee<br>polished stainless steel<br>12 mm thread 1/2"- 5/8" |

# ADAPTOR

| Reference | Description |
|---|---|
| 170C400*03000 | flare adaptor<br>for nylon (2 pcs) |
| 170C400*02000 | flare adaptor<br>for stainless steel (3 pcs) |

# REAR CONNECTION

| Reference | Rear connection for tap brass or chromed |
|---|---|
| 170C108*00121 | 12 mm |
| 170C108*00251 | 25 mm |
| 170C108*00301 | 30 mm |
| 170C108*00401 | 40 mm |
| 170C108*00501 | 50 mm |
| 170C108*00601 | 60 mm |
| Rear connections special measures on demand minimum 50 PC | |

Non-contractual photos

# ECOTAP

| Reference | Description |
|---|---|
| 173C200*00010 | ecotap<br>gold-plated<br>15 mm thread 1/2" - 5/8"" |
| 173C200*00000 | ecotap<br>chromed brass 1/2" - 5/8"<br>thread 15, 35, 55 mm<br>Also available in stainless steel |

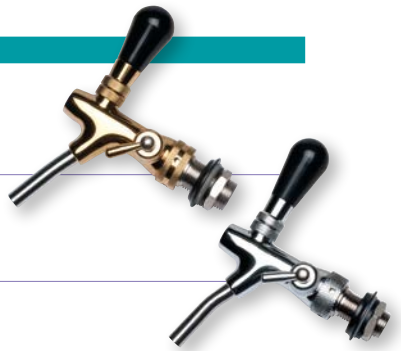

# EVENT-TAP

| Reference | Description |
|---|---|
| 175C000*00200 | Event - tap<br>5 mm thread 1/2 JG 3/8 |

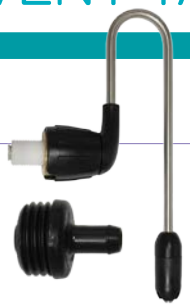

# HANDLES

| Reference | Description |
|---|---|
| 184C000*00002 | brass handle<br>thread M10 |
| 184C000*00001 | chromed handle<br>thread M10 |
| 181C001*00001 | black bakelite handle<br>thread M10 |
| 185C000*00001 | brushed handle<br>thread M10 |
| 180C500*00000 | White Handle "Elegance"<br>thread M10 |
| 180C500*00010 | Black Handle "Elegance"<br>thread M10 |

NEW

# CUSTOMISED HANDLE

| Reference | Description |
|---|---|
| 180C100*00000 | Customised plastic handle |

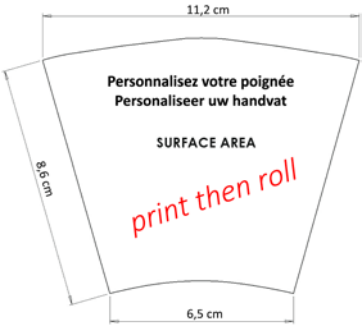


Non-contractual photos

© ANTOINE

# ALPHA II®

| Reference | Description |
|---|---|
| A3201 | Alpha2 1/2"<br>L 13 mm - Ø 8 mm<br>Brass |
| A3202 | Alpha2 1/2"<br>L 13 mm - Ø 8 mm<br>Chromed brass |
| A3101 | Alpha2 Dented front<br>for dented rear connection<br>Brass |
| A3100 | Alpha2 Dented front<br>for dented rear connection<br>Chromed brass |
| A3001 | Alpha2 compensator 1/2"<br>L 13 mm<br>Brass |
| A3000 | Alpha2 compensator 1/2"<br>L 13 mm<br>Chromed brass |
| A3081 | Alpha2 compensator 1/2"<br>L 30 mm - JG 3/8"<br>Brass |
| A3080 | Alpha2 compensator 1/2"<br>L 30 mm - JG 3/8"<br>Chromed brass |

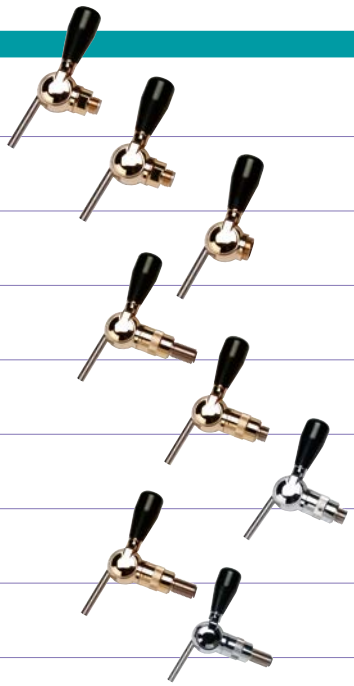

| | |
|---|---|
| A4111 | Threaded rear connection<br>10 mm (fixed part + ring))<br>Polished brass |
| A4121 | Threaded rear connection<br>22 mm (fixed part + ring)<br>Polished brass |
| A4141 | Threaded rear connection<br>30 mm (fixed part + ring)<br>Polished brass |
| A4110 | Threaded rear connection<br>10 mm (fixed part + ring)<br>Chromed brass |
| A4120 | Threaded rear connection<br>22 mm (fixed part + ring)<br>Chromed brass |
| A4140 | Threaded rear connection<br>30 mm (fixed part + ring)<br>Chromed brass |

| | |
|---|---|
| POIGN001 | Alu handle<br>Brass |
| POIGN002 | Alu handle<br>Chromed |
| POIGN003 | Alu handle<br>Pearl-chromed |
| POIGN004 | Alu handle<br>Brushed chrome |

Non-contractual photos

# DRAINERS & DRIPTRAYS

| Ref | Dimensions | With perforated plate |
|---|---|---|
| 204 | 250X 400 X 40 mm | 1 hole |
| 205 | 400 X 400 X 40 mm | 1 to 2 holes |
| 206 | 500 X 400 X 40 mm | 1 to 2 holes |
| 207 | 600 X 400 X 40 mm | 1 to 3 holes |
| 208 | 700 X 400 X 40 mm | 1 to 4 holes |
| 208C500 | 1000 X 400 X 40 mm | 1 to 5 holes |
| 209C | 1200 x 400 x 40 mm | 1 to 5 holes |
| 214 | 500 X 500 X 50 mm | 1 to 2 holes |
| 210 | 600 X 500 X 50 mm | 1 to 3 holes |
| 211 | 800 X 500 X 50 mm | 1 to 4 holes |
| 212 | 1000 X 500 X 50 mm | 1 to 5 holes |

| Ref | Dimensions | Drainer for glasses with total perforated plate |
|---|---|---|
| 205C100 | 400 X 400 mm X 40 mm | |
| 206C100 | 500 X 400 mm X 40 mm | |
| 207C100 | 600 X 400 mm X 40 mm | |
| 208C100 | 700 X 400 mm X 40 mm | |
| 209C100 | 800 X 400 mm X 40 mm | |
| 213C100 | 1000 X 400 mm X 40 mm | |

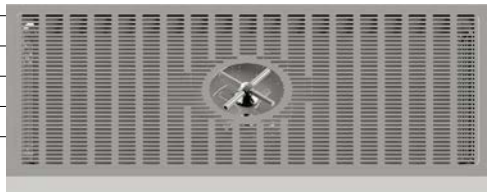

| Ref | Dimensions | Driptrays with perforated plate |
|---|---|---|
| 219C001 | 300 X 180 X 30 mm | |
| 220 | 400 X 180 X 30 mm | |
| 221 | 730 X 150 X 30 mm | |

| Ref | Dimensions | Drainers for glasses |
|---|---|---|
| 230 | 500 X 500 X 50 mm | |
| 231 | 600 X 500 X 50 mm | |
| 232 | 700 X 500 X 50 mm | |
| 233 | 800 X 500 X 50 mm | |
| 234 | 1000 X 500 X 50 mm | |

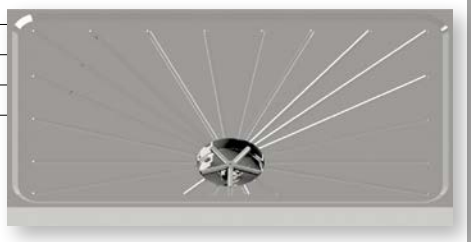

| Ref | Dimensions | Drainers for towers Half-lined models |
|---|---|---|
| | | With discharge |
| 235 | 600 X 500 X 50 mm | 1 to 3 holes |
| 236 | 700 X 500 X 50 mm | 1 to 3 holes |
| 237 | 800 X 500 X 50 mm | 1 to 4 holes |
| 238 | 1000 X 500 X 50 mm | 1 to 5 holes |
| 239 | 1200 X 500 X 50 mm | 1 to 5 holes |

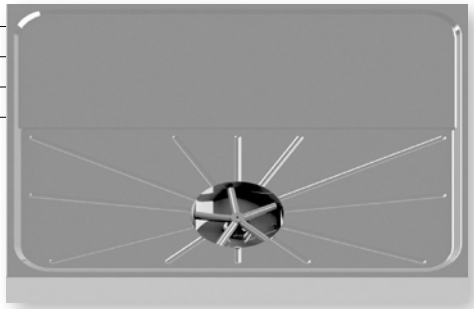



Non-contractual photos

© ANTOINE

# DRAINERS & SINKS

Funnels included

OPTION
Combined discharge
Syphon
Watertap
Glass rinser

Depth sink: 220 mm

| Ref. | Width x depth x height | |
|---|---|---|
| 255C000*1 | 800 x 500 x 50 mm, equipped with :<br>2 sinks of 290 X 350 mm<br>2 funnels | |
| 256C000*1 | 1000 x 500 x 50 mm, equipped with :<br>2 sinks of 290 X 350 mm<br>(left, right or middle)<br>2 funnels | |
| 257C000*1 | 1200 x 500 x 50 mm, equipped with :<br>2 sinks of 290 X 350 cm<br>(left, right or middle)<br>2 funnels | |

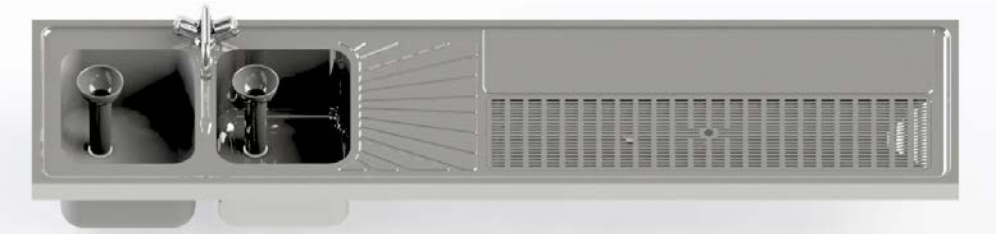

| Half lined | | Half perfored plate | |
|---|---|---|---|
| 258C150*1 | 1500 x 500 x 50 mm, equipped with:<br>2 sinks of 290 X 350 mm<br>(left, right or middle)<br>drainer half lined<br>1 to 5 holes<br>2 funnels | 258C150*0 | 1500 x 500 x 50 mm,equipped with:<br>2 sinks of 290 X 350 mm<br>(left, right or middle)<br>drainer half perforated plate<br>1 to 5 holes<br>2 funnels |
| 259C100 | 2000 x 500 x 50 mm, equipped with:<br>2 sinks of 29 x 35 cm (left or right)<br>drainer half lined<br>0 to 5 holes<br>2 funnels | 250C000 | 2000 x 500 x 50 mm, equipped with:<br>2 sinks of 290 x 350 mm (left or right)<br>drainer half perforated plate<br>0 to 5 holes<br>2 funnels |
| 259C500 | 2500 x 500 x 50 mm, equipped with:<br>2 sinks of 290 x 350 mm (left or right)<br>drainer half lined<br>0 to 5 holes<br>2 funnels | 259C400 | 2500 x 500 x 50 mm, equipped with:<br>2 sinks of 290 x 350 mm (left or right)<br>drainer half perforated plate<br>0 to 5 holes<br>2 funnels |
| 225C00*00001 | Supplement for glass-rinser | | |



Non-contractual photos

# CUSTOM MADE DRAINERS

**Custom made drainer**

**Base for drainer**

**Special pieces**

**Custom made**

NEW

## BEER WALL

**Price on request**

Our achievements :

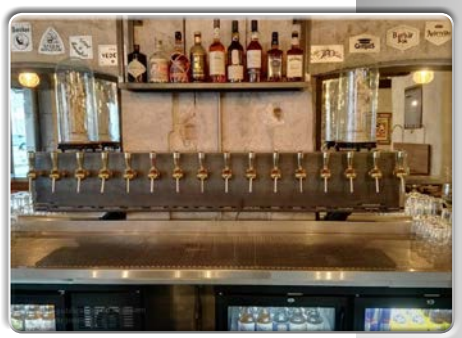

Non-contractual photos

© ANTOINE

# ACCESSORIES & CLEANING PRODUCTS

| Réf. / Ref. | Description | |
|---|---|---|
| 263 | **Funnels** | |
| 264 | **Watertap cold** | |
| 265 | **Watertap cold & warm** | |
| 266 | **Brush for glasses** | |
| 267 | **Becharein** | |
| OUT*PRO | **Maintenance / Protal for fonts** | |
| 268 | **Combined discharge** | |
| 269 | **Syphon** | |
| 271 | **Foam-cutter** | |
| 272 | **Stainless steel cup for foam-cutter** | |
| 171CBOU | **Pear for cleaning outlet tap** | |

| | Description |
|---|---|
| 225C000*00501 | **Glass rinser for drainers - Ø 102 mm**<br>• New design that prevents and minimizes the risk of bacterial transfer.<br>• water pipe included |

6/4"

Non-contractual photos

# Beer-cooler "Reversible" BANCO

| Model | Banco 14 L |
|---|---|
| Reference : | 407C |
| Compressor : | 1/5 HP |
| Power consumption: | 0°C = 216 W - -10°C = 182 W |
| Cooling capacity : | 0°C = 447 W - -10°C = 290 W |
| Number of coils max : | 1 x 15 m or 2 x 10 m |
| Water tank : | 14 L |
| Ice bank : | 4 kg |
| Dimensions mm (WxDxH) : | (325x300x665) |
| Weight: | 20,5 kg |

| Model | Banco 40 L |
|---|---|
| Reference : | 412C |
| Compressor : | 1/4 HP |
| Power consumption: | 0°C = 270 W - -10°C = 228 W |
| Cooling capacity : | 0°C = 559 W - -10°C = 364 W |
| Number of coils max : | 2 x 20 M + 1 x 10 M |
| Water tank : | 40 L |
| Ice bank : | 18 kg |
| Dimensions mm (WxDxH):<br>Vertical :<br>Horizontal : | <br>(405x445x735)<br>(750x445x475) |
| Weight: | 28 kg |

| Model | Banco 60 L |
|---|---|
| Reference : | 415C |
| Compressor : | 1/3 HP |
| Power consumption: | 0°C = 360 W - -10°C = 303 W |
| Cooling capacity : | 0°C = 745 W - -10°C = 485 W |
| Number of coils max : | 3 x 25 M + 1 x 10 M |
| Water tank : | 60 L |
| Ice bank : | 30 kg |
| Dimensions mm (WxDxH):<br>Vertical :<br>Horizontal : | <br>(485x485x860)<br>(805x505x510) |
| Weight: | 42 kg |

| Model | Banco 90 L |
|---|---|
| Reference : | 422C |
| Compressor : | 1/2 HP |
| Power consumption: | 0°C = 540 W - -10°C = 455 W |
| Cooling capacity : | 0°C = 1118 W - -10°C = 727 W |
| Number of coils max : | 5 x 25 M + 1 x 10 M |
| Water tank : | 90 L |
| Ice bank : | 45 kg |
| Dimensions mm (WxDxH):<br>Vertical :<br>Horizontal : | <br>(585x595x915)<br>(950x595x610) |
| Weight: | 52 kg |

| Model | Banco 144 L |
|---|---|
| Reference : | 432C |
| Compressor : | 3/4 HP |
| Power consumption: | 0°C = 810 W - -10°C = 682 W |
| Cooling capacity : | 0°C = 1677 W - -10°C = 1090 W |
| Number of coils max : | 10 x 25 M + 2 x 10 M |
| Water tank : | 144 L |
| Ice bank : | 75 kg |
| Dimensions mm (WxDxH): | (1230x555x595) |
| Weight: | 59 kg |

- Reversible (Horizontal)
- Adjustable water tank and ice bank
- Frame in skinplate

(not reversible)

(not reversible)

BEER-COOLERS

Non-contractual photos

© ANTOINE

# BEER-COOLER COMPACT

| Modèle | 25 L | 90 L | 140 L |
|---|---|---|---|
| Compressor : | 1/4 HP | 1/2 HP | 1 HP |
| Power consumption: | 0°C = 270 W<br>-10°C = 228 W | 0°C = 540 W<br>-10°C = 455 W | 0°C = 1080 W<br>-10°C = 910 W |
| Cooling capacity : | 0°C = 559 W<br>-10°C = 364 W | 0°C = 1118 W<br>-10°C = 727 W | 0°C = 2236 W<br>-10°C = 1454 W |
| Ice bank : | 8 kg | 45 kg | 75 kg |
| Water tank : | 25 L | 90 L | 144 L |
| Number of coils max. : | 2 X 18 M + 1 X 10 M | 4 X 22 M + 1 X 10 M | 10 x 25 M + 2 x 10 M |
| Dimensions mm (WxDxH) : | (535x340x590) | (775x510x620) | (860 X 580 X 900 (vertical)) |
| Weight : | 28 kg | 46 kg | 65 kg |

# WATERBATH

| Modèle | 60 L | 90 L | 144 L |
|---|---|---|---|
| Compressor not included : | 1/3 HP | 1/2 HP | 3/4 or 1 HP |
| Power consumption: | à 0°C = 315 W<br>à -10°C = 265 W | à 0°C = 540 W<br>à -10°C = 455 W | à 0°C = 810 W<br>à -10°C = 682 W |
| Cooling capacity : | à 0°C = 730 W<br>à -10°C = 475 W | à 0°C = 1118 W<br>à -10°C = 727 W | à 0°C = 1600 W<br>à -10°C = 1000 W |
| Ice bank : | 30 kg | 40 kg | 75 kg |
| Number of coils max. : | 3x22m + 1x10m | 5x22m + 1x10m | 10x25 + 2x10 |
| Water tank : | 60 L | 90 L | 144 L |
| Dimensions mm (WxDxH) : | (540x465x595) | (625x55x590) | (940x550x590) |
| Weight : | 19 kg | 24 kg | 32 kg |

# PUMPS & AGITATORS

| Reference | |
|---|---|
| 666C000*00000 | Agitator 1500 T/M |
| 661C000*00300 | Agitator 2500 T/M |
| 656C000*P1407 | Circulation pump - height mano. 7 m - 30 W - 0,14 A |
| 658C000*P1312 | Circulation pump - height mano. 12 m - 60 W - 0,27 A |
| 658C000*P1320 | Circulation pump - height mano. 18 m - 90 W - 0,41 A |
| 659C000*00023 | Circulation pump - height mano. 23 m - 90 W - 0,41 A |

| | |
|---|---|
| 662C000*00001 | Thermostat type K50 from -2,5° to +10°C - capillary lenght 1,2 m |
| 389C000*00500 | Immerged circulation pump |

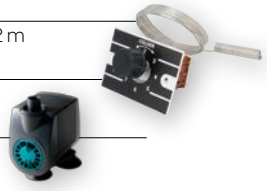



Non-contractual photos

# KEG - COOLERS

| Ref. | Description |
|---|---|
| 524C001*05500A | **2 X 20 L**<br>For 2 kegs<br>Dimensions (W x D x H)<br>620 x 575 x 820/860 mm<br>2 kegs of 20 L<br>Built-in monobloc<br>Finish: grey anthracite<br>Power : 345 W<br>Cooling gas : R290 |
| 524C001*08800A | **4 X 20 L * 1 X 30 L * 1 X 50 L**<br>For 4 kegs<br>External dimensions (W x D x H)<br>880 X 590 X 820/860 mm<br>Internal dimensions<br>500 X 500 X 765 mm<br>Built-in monobloc<br>Finish: grey anthracite<br>Power : 345 W<br>Cooling gas : R290 |
| 524C001*11100A | **6 X 20 L * 1 X 30 L * 1 X 50 L**<br>For 6 kegs<br>External dimensions (W x D x H)<br>1110 X 590 X 820/860 mm<br>Internal dimensions<br>730 X 500 X 765 mm<br>Built-in monobloc<br>Finish: grey anthracite<br>Power : 345 W<br>Cooling gas : R290 |
| 524C001*13500A | **8 X 20 L * 2 X 30 L * 2 X 50 L**<br>For 8 kegs<br>External dimensions (W x D x H)<br>1350 X 590 X 820/860 mm<br>Internal dimensions<br>970 X 500 X 765 mm<br>Built-in monobloc<br>Finish: grey anthracite<br>Power : 345 W<br>Cooling gas : R290 |

REMOVABLE MONOBLOC

Non-contractual photos

© ANTOINE

## FOR 1 TAP

| Reference | Description |
|---|---|
| **524C001*05500A** | **1 keg-cooler 2X20L (LXDXH): 620 x 590 x 820/880 mm** |
| **On choice** | 1 tower 1 tap |
| **On choice** | 1 drainer L max. 620 mm |
| 302C000*01500 | 1 pressure regulator 2 levels 1,5 bars |
| **On choice** | 1 coupling head A or S with elbow valve |
| 524C100*00001 | 1 accessories kit |
| 524C000*VEN01 | 1 Fanset for keg-cooler |
| 524C100*00004 | 1 complete assembly in workshop |
| | **In option :** |
| 524C001*ROU01 | Mobile : 4 wheels Ø 125 mm (2 with brakes) |

## FOR 2 TAPS

| Référence | Description |
|---|---|
| **524C001*08800A** | **keg-cooler 4X20L (LXDXH): 880 x 590 x 820/880 mm** |
| **On choice** | 1 tower 2 taps |
| **On choice** | 1 drainer L max. 880 mm |
| 302C000*01500 | 1 pressure regulator 2 levels 1,5 bars |
| **On choice** | 2 coupling heads A ou S with elbow valve |
| 524C100*00001 | 1 accessories kit |
| 524C000*VEN01 | 1 Fanset for keg-cooler |
| 524C100*00004 | 1 complete assembly in workshop |
| | **In option :** |
| 524C001*ROU01 | Mobile : 4 wheels Ø 125 mm (2 with brakes) |

## FOR 3 TAPS

| Référence | Description |
|---|---|
| **On choice** | **keg-cooler 6X20L (LXDXH): 1110 x 590 x 820/880 mm** |
| **On choice** | 1 tower 3 taps |
| **On choice** | 1 drainer L max. 1100 mm |
| 302C000*01500 | 1 pressure regulator 2 levels 1,5 bars |
| **On choice** | 3 coupling heads A or S with elbow valve |
| 524C100*00001 | 1 accessories kit |
| 524C000*VEN01 | 1 Fanset for keg-cooler |
| 524C100*00005 | 1 complete assembly in workshop |
| | **In option :** |
| 524C001*ROU01 | Mobile : 4 wheels Ø 125 mm (2 with brakes) |

## FOR 4 TAPS

| Référence | Description |
|---|---|
| **On choice** | **keg-cooler 8X20L (LXDXH): 1350 x 590 x 820/880 mm** |
| **On choice** | 1 tower 4 taps |
| **On choice** | 1 drainer L max. 1350 mm |
| 302C000*01500 | 1 pressure regulator 2 levels 1,5 bars |
| **On choice** | 4 coupling heads A or S with elbow valve |
| 524C100*00001 | 1 accessories kit |
| 524C000*VEN01 | 1 Fanset for keg-cooler |
| 524C100*00005 | 1 complete assembly in workshop |
| | **In option :** |
| 524C001*ROU01 | Mobile : 4 wheels Ø 125 mm (2 with brakes) |



Non-contractual photos

# Bottle-coolers **VISION**

| Description | | | |
|---|---|---|---|
| Reference : | 775C000*00010 | 774C000*00010 | 773C000*00010 |
| LED illumination | Yes | Yes | Yes |
| Dimensions: | Dimensions: 600x500x900 | 900x500x900 | 1350x500x900 mm |
| Bottle capacity: | 105 bottles of 33 cl | 180 bottles of 33 cl | 325 bottles of 33 cl |
| Volume: | 150 L | 250 L | 315 L |
| Interior finish: | silver skinplate | silver skinplate | silver skinplate |
| Exterior finish: | anthracite skinplate | anthracite skinplate | anthracite skinplate |
| Capacity: | 210 W - 1/5 HP - 220/240 V - 50 Hz | 230 W - 1/5 HP - 220/240 V - 50 Hz | 260 W - 1/4 HP - 220/240 V - 50 Hz |
| Adjustable thermostat: | +2°C/+10°C | +2°C/+10°C | +2°C/+10°C |
| Refrigerant gas : | R600 | R600 | R600 |
| Automatic defrost | Yes | Yes | Yes |
| Lock | Yes | Yes | Yes |
| Netto weight: | Netto weight 50 KG | Netto weight 60 KG | 100 KG |
| | Door opening only to the right | 774C000*0020 / With 2 sliding doors | 773C000*0020 / With 3 sliding doors |

## Description

Ref.: 777C200*00010

Bottle capacity: 372 L - 275 BT
Capacity : 1/4 HP – 525W
Dimensions (W x D x H) : 595 x 600 x 1980 mm
Weight : 89 kg
Cooling gas : R600
Adjustable thermostat: 1° C à 10° C
with advertising top

## Description

Ref.: 777C300*00010

Bottle capacity: 375 L - 275 BT
Capacity : 1/4 HP – 525W
Dimensions (W x D x H) : 595 x 600 x 1840 mm
Weight : 86 kg
Cooling gas : R600
Adjustable thermostat: : +1°C / +10°C
ref : 777C300*CH010
Structure on wheels for vision coolers

NEW

Non-contractual photos

© ANTOINE

# Bottle coolers **BAHUT**

On demand
minimum quantity 50 pc

| Ref. | Description | |
|---|---|---|
| 780C000*00000 | Bottle cooler “Bahut” standard<br>Dimensions (WxDxH): 1030 x 620 x 1015 mm<br>2 sliding covers<br>Volume : 257 Liters<br>Standard wheels | |
| 780C000*00002 | Bottle cooler “Bahut”<br>Dimensions (WxDxH): 1030 x 620 x 1065 mm<br>2 sliding covers<br>Volume : 257 Liters<br>Big wheels diameter 100 mm | |
| 780C000*00001 | Bottle cooler “Bahut” Fortified<br>Dimensions (WxDxH): 1030 x 620 x 1065 mm<br>2 sliding covers<br>Volume : 257 Liters<br>With protection<br>Big wheels diameter 100 mm | |
| 780C000*CHA10 | Framework in stainless steel for transport | |



Non-contractual photos

# BOTTLE - COOLERS
## with built-in cooling unit- FULL DOORS

- 2 shelves per door
- 3 storage levels
- LED lights
- Cooling unit on left side or right

| | Ref. | LxDxH | Doors Lenght | Number of bottles 25 cl | Cooling capacity | Weight |
|---|---|---|---|---|---|---|
| 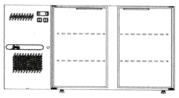 | 9000C 1240* | 1240 mm 550 mm 820 mm | 2<br>390 mm (#) 395 mm | 273 | 525 W 1/4 HP R 134 a 220 V-2,7 A | 84 kg |
| 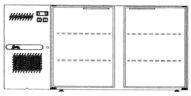 | 9000C 1350* | 1350 mm 550 mm 820 mm | 2<br>455 mm | 301 | 525 W 1/4 HP R 134 a 220 V-2,7 A | 88 kg |
| 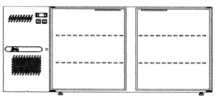 | 9000C 1540* | 1530 mm 1540 mm 550 mm 820 mm | 2<br>455 mm (#) 525 mm | 373 | 525 W 1/4 HP R 134 a 220 V-2,7 A | 94 kg |
| 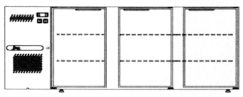 | 9000C 1740* | 1740 mm 550 mm 820 mm | 3<br>330 mm (#) 395 mm | 440 | 525 W 1/4 HP R 134 a 220 V-2,7 A | 104 kg |
| 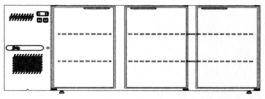 | 9000C 1880* | 1875 mm 1880 mm 550 mm 820 mm | 3<br>455 mm (#) 440 mm | 485 | 700 W 1/3 HP R 134 a 220 V-3,4 A | 108 kg |
| 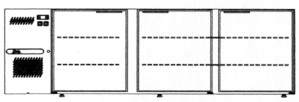 | 9000C 2140* | 2140 mm 550 mm 820 mm | 3<br>540 mm (#) 525 mm | 570 | 700 W 1/3 HP R 134 a 220 V-3,4 A | 120 kg |

- Adjustable feet 30/50 mm
- removable feet
- LED light inside
- Options : Lock

Non-contractual photos

© ANTOINE

# BOTTLE-COOLERS
## with built-in cooling unit - GLASS DOORS

- Adjustable feet 30/50 mm
- removable feet
- LED light inside
- Options : Lock

- 2 shelves per door
- 3 storage levels
- LED lights
- Cooling unit on left side or right

| | Ref. | Width<br>Depth<br>Height | Door width | Bottles<br>Capacity<br>25 cl | Power con-<br>sumption<br><br>Compressor<br><br>Voltage | Weight |
|---|---|---|---|---|---|---|
| 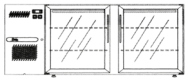 | 9000C<br>1540*200 | 1535 mm<br>550 mm<br>820 mm | 2<br><br>554 mm | 373 | 525 W<br>1/4 HP - PK<br>R 134a<br>220 V-2,7 A | 109 kg |
| 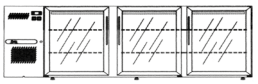 | 9000C<br>2140*200 | 2140 mm<br>550 mm<br>820 mm | 3<br><br>554 mm | 570 | 700 W<br>1/3 HP - PK<br>R 134a<br>220 V-3,4 A | 145 kg |

# BOTTLE-COOLERS
## Built-in cooling unit - with sliding drawers

| ref | type | Doors | Drawers |
|---|---|---|---|
| 9000C1540*101 | 154 | 1 | 1 à 2 |
| 9000C1540*105 | 154 | 0 | 2 x 2 |
| 9000C2140*101 | 214 | 1+1 | 1 x 2 |
| 9000C2140*102 | 214 | 1 | 2 x 2 |
| 9000C2140*105 | 214 | 0 | 3 x 2 |



Non-contractual photos

# Python-line polyethylene beer 3/8" water 1/2"

| | |
|---|---|
| 649C000*00100 | 2 beer lines + 2 water circulations interior Ø 12,7 mm<br>insulation 19 mm Armaflex exterior Ø 70 mm |
| 649C001*01000 | 3 beer lines + 2 water circulations interior Ø 12,7 mm<br>insulation 19 mm Armaflex exterior Ø 70 mm |
| 649C002*01000 | 4 beer lines + 2 water circulations interior Ø 12,7 mm<br>insulation 19 mm Armaflex exterior Ø 70 mm |
| 649C003*01000 | 5 beer lines + 2 water circulations interior Ø 12,7 mm<br>insulation 19 mm Armaflex exterior Ø 70 mm |
| 649C004*01000 | 6 beer lines + 2 water circulations interior Ø 12,7 mm<br>insulation 19 mm Armaflex exterior Ø 70 mm |
| 649C008*01000 | 7 and 8 beer lines + 2 water circulations interior Ø 12,7 mm<br>insulation 19 mm Armaflex exterior Ø 70 mm |

# Quick-coupling for python-lines and accesories

| | |
|---|---|
| 380C000*00003 | PI 0416S union double equal 1/2" |
| 380C005*00024 | PI UB16S by-pass U 1/2" |
| 380C015*00002 | PI 221616S bend nipple 1/2" |
| 380C015*00003 | PI 0316S angled union equal 1/2" |
| 380C001*00002 | PI 0216S T 1/2" |
| 380C006*00050 | PI 251616S connector tube to hose stem 1/2" |
| 649C100*00001 | By-pass fitting in stainless steel<br>Diameter entrance and exit 12,7 mm |
| 649C100*00002 | Pump - python fitting<br>Diameter entrance: 8 mm<br>Diameter exit: 12,7 mm |
| 649C100*00002 | Key to disconnect John Guest connectors<br>MADE BY ANTOINE |

Non-contractual photos

© ANTOINE

# Maintenance products & Tools

| Ref. | Description |
|---|---|
| | **Plumbing tools**<br>**Maintenance products** |
| 372C000*00000 | Stainless steel tube cutter<br>Short model |
| 373C000*00000 | Stainless steel tube cutter<br>Big model |
| 376C000*00003 | Bending spring for<br>stainless steel tube Ø 7/8 |
| 376C000*00004 | Bending spring for stainless<br>steel tube Ø 8/9 |
| 379C000 | Cleaning sponges in sacks of 100 pieces.<br>Ø 7, 8 or 9 mm. |
| 381C000*00001 | Cleaning brush for outlet tap<br>Ø 11 mm. |
| 382C000*00000 | Cleaning brush for keg-coupler Alumasc |
| 382C000*00001 | Cleaning brush for keg-coupler Sankey |
| 383C000*00003 | Purexol in bottle of 1 L. |
| 383C000*00000 | Purexol in bottle of 10 L. |
| OUT*PRO*00001 | Maintenance product for all metals PROTALL |
| 267C000*00010 | Maintenance product for the cleaning of glasses BECHAREIN |
| 384C000*00100 | Grease for tap in tube of 60 gr. |
| 385C000*00005 | Cleaning adapter ECOTAP |
| 389C000*00000 | Electric cleaning pump MINIMAX |
| 348C000*0100 | Professional thermometer waterproof -50°C to 300°C |
| | **Accessories for cleaning pump** |
| 346C006*00100 | Rinsing adapter SANKEY / ALUMASC |
| 346C006*00101 | Rinsing adapter SANKEY / SANKEY |
| 346C006*00102 | Rinsing adapter ALUMASC / ALUMASC |
| | **Cleaning bottle** |
| 335CBID*09000 | Stainless steel cleaning bottle 9 L.<br>(3 couplers to determine) |
| 335CBID*09001 | Stainless steel cleaning bottle 9 L.<br>(5 couplers to determine) |
| 335CBID*PL001 | Cleaning head sankey for bottle 9 L. |
| 335CBID*PL002 | Cleaning head Alumasc for bottle 9 L. |
| 335CBID*PL003 | Cleaning head Grundy for bottle 9 L. |
| 335CBID*PL004 | Cleaning head UEC for bottle 9 L. |
| 335CBID*PL005 | Cleaning head Keykeg for bottle 9 L. |
| 335CBID*PL006 | Cleaning head "D" for bottle 9 L. |

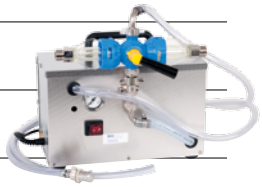

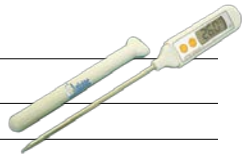

Non-contractual photos

# CLEANING & COUPLING HEADS

| Model | Description |
|---|---|
| 338C000*00100 | Alumasc head, without valve, tap and nipple |
| 335C000*00100 | Sankey head, without valve, tap and nipple |
| 335C006*00000 | Keykeg head with decompression valve, without J.G. |
| | |
| 338C000*00080 | Alumasc head with stop valve and integrated JG 3/8 |
| 335C000*00080 | Sankey head with stop valve and integrated JG 3/8 |
| 335C006*00001 | Keykeg head with decompression valve with J.G. |
| | |
| 338C000*JO1000 | Set of gaskets for Alumasc head |
| 335C000*JO1000 | Set of gaskets for Sankey head |
| | |
| 346C004*00001 | Kit of cleaning head Alumasc |
| 346C003*00001 | Kit of cleaning head Sankey |
| 346C005*00000 | Kit of cleaning head Keykeg |

| | |
|---|---|
| 339C000*00101 | Angle valves for flow head |

Sankey

Alumasc

Grundy

Keykeg

# END OF KEG DETECTOR & ACCESSORIES

Save and avoid infections

| Référence | Description |
|---|---|
| 789C000*00002 | Coolbox for end of kegs detector |

- Dimensions (LxDxH) : 670x210x500 mm
- 1 cooling coil 8/9
- 1 SS plate to mount end of kegs detectors
- Finition : skinplate

- Reversible doors
- 1 hole for pyhton line of Ø 85 mm
- 5 holes for beer lines of Ø 50mm
- 20 screws M4 to mount detectors

| | |
|---|---|
| Q1825 | End of keg detector ecoflow PVC |
| Q1710 | End of keg detector CELLARBUOY (electric) |
| Q1700 | End of keg detector in SS FOBSTOP |

Réf: Q1825

Réf: Q1710

* End of keg detectors not included

Non-contractual photos

© ANTOINE

# PRESSURE REGULATORS

| Model | Description |
|---|---|
| | **Premium regulator** - with high and low pressure manometer |
| 301 | 1 exit |
| 302 | 2 exits |
| 303 | 3 exits |
| 306 | 2 exits |
| 305 | **Intermediate regulator** - With manometer 1 exit |

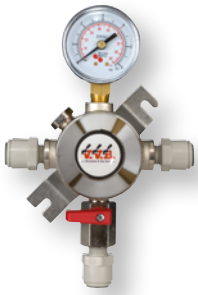

| | |
|---|---|
| 302C00*01500 | **Double level regulator 1,5 Bar - 1 exit** |

**Pressure gallery**
With premium regulator fixed on gallery, with high pressure cable equipped with:

| | |
|---|---|
| 319 | 2-way distributor |
| 320 | 3-way distributor |
| 321 | 2 intermediate regulators 1 exit |
| 322 | 1 intermediate regulator 1 exit<br>1 intermediate regulator 2 exits |
| 324 | 3 intermediate regulators 1 exit |
| 328 | 4 intermediate regulators 1 exit |
| 329 | 5 intermediate regulators 1 exit |



Non-contractual photos

# SAFARI

| | SAFARI 20 SUPER | SAFARI 50 HYPER |
|---|---|---|
| | 491C100*00000<br>491C100*00100 | 492C100*00000 |
| Taps | 1-2 | 2 |
| Compressor HP - Power | 1/4 432 W | 1/3 579 W |
| Ice bank | 7 kg | 35 kg |
| Water tank | 17 L | 50 L |
| Agitator | Yes | Yes |
| Dimensions (WxDxH) | 520x370x410 mm | 732x427x490 mm |
| Weight | 32 kg | 43 kg |
| Performance L/H | 97 | 197 |
| Kit CO2 | Yes | Yes |

Not included : coupling head
Structure for Safari : R495

Super

Hyper

**Available space inside**
**WxDxH : 480 x 520 x 930 mm**

Non-contractual photos

© ANTOINE

# DRY COOLER

## DESIGN & PERFORMANCE

**DRY 40 - 1 TAP**

**DRY 70 - 1 TAP**

**DRY 155 - 2 TAPS**

**Transport handles**

**with flow regulator**

**front thermostat**

**with air compressor**
*** for one-way keg**
**with pressure bag**

| Ref | Coils | Compressor | Performance | Dim. (WxDxH) | Weight | Watts |
|---|---|---|---|---|---|---|
| 494C010*00040 | 1 x 28 M | 1/5 HP | 20 L/H | 225x330x425 mm | 26 kg | 540 W |
| 494C010*00070 | 1 x 28 M | 1/3 HP | 35 L/H | 245x340x440 mm | 29 kg | 890 W |
| 494C020*00155 | 2 x 26 M | 3/4 HP | 60 L/H | 265x380x495 mm | 41 kg | 1550 W |

Not included : coupling heads



Non-contractual photos

# TIPTAP

| | TIP TAP |
|---|---|
| | R 404C000*00000 |
| Taps | 1 - 2 |
| Compressor HP | 1/4 HP |
| Ice bank | 6 kg |
| Water tank | 20 L |
| Agitator | 2 M |
| Dimensions (WxDxH) | 630x450x290 mm |
| Weight | 23 kg |
| Performance | 50 L/H |

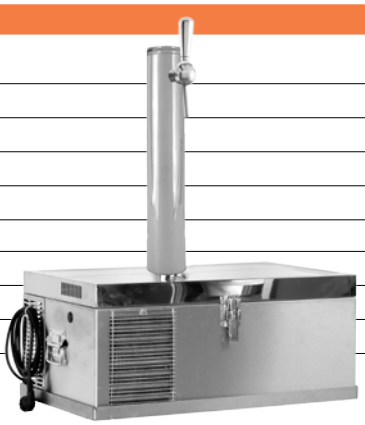

1-2 t

**Available space inside**
**WxDxH : 650x 420x800 mm**

# EVENT - COOLER

Built-in $co_2$ kit
Not included : Coupling heads

60L Upon request per 24 PC

| | 1/3 Hp 60L | 1/2 Hp 90L | 1 Hp 90L |
|---|---|---|---|
| | 499C000*00000<br>499C100*00000 | 499C600*00000 | 499C800*00000 |
| Dimensions (WxDxH) | 400x400x1505 mm | 535x525x1476 mm | 545x525x1551 mm |
| Taps | 1 - 2 | 2 | 2 |
| Weight | 69 kg | 79 kg | 80 kg |
| Compressor | 1/3 HP - PK | 1/2 HP - PK | 1 HP - PK |
| Performance (L/H) | 107 L | 288 L | 376 L |
| Power | 230 V / 50 Hz | 230 V / 50 Hz | 230 V / 50 Hz |
| Performance HP (0°) | 375 W | 540 W | 1050 W |
| Type of gas | R134a | R134a | R134a |
| Thermostat | Mec. -2°C/+10°C | Mec. -2°C/+10°C | Mec. -2°C/+10°C |
| Icebank | 22 kg | 45 kg | 45 kg |
| Watertank | 50 L | | |
| Drainer valve | Yes | Yes | Yes |

Non-contractual photos

© ANTOINE

# TAPSTAR II

| TAPSTAR II | R402 | R403 |
|---|---|---|
| Taps | 1 | 2 |
| Compressor HP | 1/4 | 1/4 |
| Icebank | 8 L | 8 L |
| Watertank | 20 L | 20 L |
| Agitator | 1500 RPM | 1500 RPM |
| Dimensions (WxDxH) | 325x690x560 mm | 325x690 560 mm |
| Weight | 30kg | 30kg |
| Performance | 50 L/H | 50 L/H |

# BREUGHEL COMPACT

| | BREUGHEL 400 COMPACT |
|---|---|
| | R 496C01*00200 |
| Taps | 2 |
| Compressor HP | 1 |
| Icebank | 45 kg |
| Watertank | 90 L |
| Dimensions (WxDxH) | 530 x 680 x 1110 mm |
| Weight | 73 kg |
| Performance | 200 L/H |

Built-in $co_2$ kit
Not included : Coupling heads

**Easy to transport**
**Reduced height 1110 mm !**

# BREUGHEL

| | BREUGHEL |
|---|---|
| | R 497C000*00000 - 498C000*00000 |
| DOUBLE EVAPORATOR | |
| Taps | 2 - 3 |
| Compressor HP | 1 |
| Icebank | 45 kg |
| Watertank | 90 L |
| Dimensions (WxDxH) | 620 x 675 x 1550 mm |
| Weight | 78 kg |
| Performance | 200 L/H |

Built-in $co_2$ kit
Not included : Coupling heads

Non-contractual photos

# ROLL BAR G88

1 - 3 taps

| Description |
| --- |
| R500C000*00000 |
| Dimensions : 865 x 530 x 1500 mm (WxDxH) |
| 1 Banco 1/2 HP 90 L |
| 2 coils + agitator 2500 t/m |
| 1 drainer half-lined 800 x 500 mm 2 holes |
| 2 USA single polished stainless steel |
| 4 Wheels Ø 125 mm (2 with brakes) |
| With holes for parasol |
| Removable panels |

| Description |
| --- |
| R500C000*00100 |
| Dimensions : 865 x 530 x 1500 mm (WxDxH) |
| 1 Sink 800 x 500 mm |
| 2 sinks in the center + accessories |

| Description |
| --- |
| R500C000*00200 |
| Dimensions : 865 x 530 x 1000 mm (WxDxH) |
| Removable panels |
| 1 drainer lined 800 x 500 mm for glasses |
| Accessories |

Non-contractual photos

© ANTOINE

# ROLL BAR GT108 «EXTENSO»

1 - 3 TAPS

Option
Service tablet

| Description |
|---|
| R501C000*00000 |
| Dimensions : 1080 x 530 x 1500 mm (WxDxH) |
| 2 pliable tablets 460 x 530 mm |
| Total length when opened: 2000 mm |
| Total length when closed: 1150 mm |
| 1 Banco 1/2 HP 90 L |
| 2 coils 25m 7/8 + agitator 2500 RPM |
| 1 drainer half-lined 80 x 50 cm 2 holes |
| 2 USA 1 tap polished stainless steel (Not illuminated) |
| 4 wheels Ø 125 mm (2 with brakes) |
| With holes for parasol and removable panels |

# ROLL BAR GT160 ALL-IN-ONE

1 - 3 TAPS

Option
Service tablet

| Description |
|---|
| R501C000*00320 |
| Dimensions : 1600x530x1500 mm (WxDxH) |
| 2 pliable tablets 460x530 mm |
| Total length when opened: 2480 mm |
| 1 drainer - sink 1500x500x50 mm |
| 2 sinks, 2 funnels, 1 cold water tap |
| 2 USA polished stainless steel (Not illuminated) |
| 1 banco 1/2 HP 90 L |
| 2 coils of 25 m 7/8 + agitator 2500 RPM |
| 4 wheels Ø 125 mm (2 with brakes) |
| With holes for parasol and removable panels |
| Option: Kit CO2 and coupling heads |

# ROLL BAR GT XL

1 - 4 TAPS

Option
Service tablet

| Description |
|---|
| 501C160*0002 |
| Dimensions : 1600 x 630 x 1500 mm (WxDxH) |
| Total length with tablets: 2480 mm |

**Equipped with:**

- 2 pliable tablets 460 x 530 mm
- 1 banco 3/4 HP 144L. Extra Large / Icebank 80 kg
- 2 coils + agitator 2500 T & drain tap
- 1 drainer - sink 150 x 60 cm, 2 holes
- 2 towers USA 1 tap - chromed
- 4 wheels Ø 125 - 2 with brakes
- With holes for parasol and removable panels

**Alternatively:**

501C160*00003
with 3 towers USA 1 tap - chromed
501C160*00004
with 4 towers USA 1 tap - chromed

Non-contractual photos

https://youtu.be/blSQKOPeNNk

# SPEEDTAP

| Description |
|---|
| REF : 504C000*0000 |
| Dimensions (WxDxH) : 1500x620x1337 mm |
| 4 Alpha II taps |
| Tower : Adjustable height and angle |
| Compressor : 1 HP |
| Power : 230V / 50Hz - 5,10 A |
| Cooling capacity @ 0°C : 2714 W |
| Power consumption @ 0°C : 1050 W |
| Type of gas : R-134 |
| Thermostat : -2C° à + 10C° |
| Icebank max :85kg |
| 4 Coils of 25 m |
| 4 big wheels with brake |
| Waterbath : 144 liters |
| Built-in co2 regulator |
| Drain valve included |
| 1 Set of 3 grey panels |
| 3 aluminium trays for 16 glasses included |

# FOLDING COUNTER

| Description |
|---|
| 502C000*001001<br>- Stainless steel frame: 1270x535x1000mm (LxDxH) |
| 502C000*00000<br>- with 1 drainer 1200x500 mm (frame included) |
| 502C000*00010<br>- with 1 drainer with 2 sinks 1200x500 mm (frame included) |

# SERVICE COUNTER

| Description |
|---|
| 502C100*00001 |
| 1 Framework in stainless steel 1500 x 300 x 1100 mm (LxDxH) |

## MADE ON REQUEST

Non-contractual photos



© ANTOINE

# ICE CUBES - MACHINES
# with built-in storage space

| Ref. | Description | |
|---|---|---|
| R801C000*00001 | Model IM-30 CLE<br>Maximum production in 24 hours: 28 KG<br>Storage capacity: 11 KG<br>Length: 398 mm<br>Width: 495 + 6 mm<br>Height: 695 + 10 mm<br>Capacity: 250 W/H<br><br>Pure and compact ice<br>Lasts longer<br>Stainless steel housing for<br>hygiene and a longer lifetime. | |
| R801C000*00002 | Model IM-45 CLE<br>Maximum production in 24 hours: 45 KG<br>Storage capacity: 15 KG<br>Length: 633 mm<br>Width: 506 + 6 mm<br>Height: 690 + 10 mm<br>Capacity: 300 W/H<br><br>Pure and compact ice<br>Lasts longer<br>Stainless steel housing for<br>hygiene and a longer lifetime. | |
| R801C000*00003 | Model IM-65 LE<br>Maximum production in 24 hours: 64 KG<br>Storage capacity: 26 KG<br>Length: 633 mm<br>Width: 506 + 6 mm<br>Height: 850 + 10 mm<br>Capacity: 420 W/H<br><br>Pure and compact ice<br>Lasts longer<br>Stainless steel housing for<br>hygiene and a longer lifetime. | |
| R801C000*00005 | Model IM-100 CLE<br>Maximal production in 24 hours: 97 KG<br>Storage capacity: 50 KG<br>Length: 704 mm<br>Width: 506 + 6 mm<br>Height: 1200 + 10 mm<br>Capacity: 610 W/H<br><br>Pure and compact ice<br>Lasts longer<br>Stainless steel housing for<br>hygiene and a longer lifetime. | |



Non-contractual photos

# Terms and conditions of sale

GENERAL

1. Unless otherwise agreed in writing, our prices are understood to be net of VAT, without any discount, rebate or deduction.
2. Transactions negotiated by our representatives are only considered valid and final after acceptance and confirmation by us.
3. Any claims concerning invoices or relating to goods shall only be entertained when submitted in writing within one week.
4. All goods remain our property until full payment of the invoice.
5. SA Antoine also reserves the right to change, without prior notice, the characteristics and equipment for the products presented.

PAYMENT

6. Our invoices are payable immediately in cash.
7. Other invoices are payable 30 days end of the month from the invoice date.
8. Failure to pay any invoice on the due date shall, without any requirement for formal written notice, result in a lump sum penalty of 10 % being automatically added to the amount of the outstanding invoice in compensation for the damages caused by the purchaser's failure to perform. Such amount shall be a minimum of EUR 25, without prejudice to any right of the debtor to request a grace period under the conditions set out in article 1244 of the Civil Code.
9. Interest of 10 % per annum shall be automatically due when payment is not made on the due date indicated, without there being any requirement for formal notice.

JURISDICTION

10. The Courts of Brussels and, where appropriate, the Justice of the Peace of the 2nd subdistrict of Brussels, shall have jurisdiction in the event of any dispute.

CONTRIBUTION TO ADMINISTRATION FEES

11. For the drawing up of invoices for amounts of EUR 12.50 or less, a sum of EUR 2.50 shall be charged as a contribution towards administration fees.

All our products are covered by a warranty, subject to the following conditions:

**WARRANTY**

I) Plumbing and refrigeration equipment
Twelve (12) months for manufacturing defects resulting in abnormal wear, except where the product is used for a purpose for which it was not intended or due to a lack of maintenance. Transport costs are not included in the warranty.

II) Refrigeration equipment
One (1) year warranty: parts: in exchange for the defective part in our stores. The client remains responsible for labour – thermostat – fan – compressor – mixer – pump.
Twelve (12) months for door seals, except in case of improper use or lack of maintenance.

The customer is responsible for carrying out the works indicated in the instruction manual supplied with the appliance. Works, in this context, is understood to mean all reasonable maintenance of the refrigeration appliance.

The customer undertakes not to modify (or to have modified) or to add anything to the appliance without the prior, written authorisation of SA Antoine.

WARRANTY EXCLUSIONS

Defects caused by a lack of maintenance
Defects caused by improper use
Defects caused by external factors
Cleaning of the condenser
Replacement of light bulbs or door seals
Drainage hole clogged by condensation
Thermostat adjustment

SA Antoine rejects any liability for damages, loss of turnover or consequential damages associated with the improper functioning of the appliance covered by this warranty. This rejection of liability does not, however, apply in the case of damages which are the direct consequence of intentional conduct or gross negligence on the part of SA Antoine.

www.antoine-belgium.com

## HEADQUARTERS

**BRUSSELS**
Rue de la Bienvenue, 7-9 • 1070 Bruxelles
Verwelkomingsstraat 7-9 • 1070 Brussel

**Antoine:** Tél +32 (2) 523 94 30 • Fax +32 (2) 520 06 18
info@antoinebelgium.be • www.antoine-belgium.com
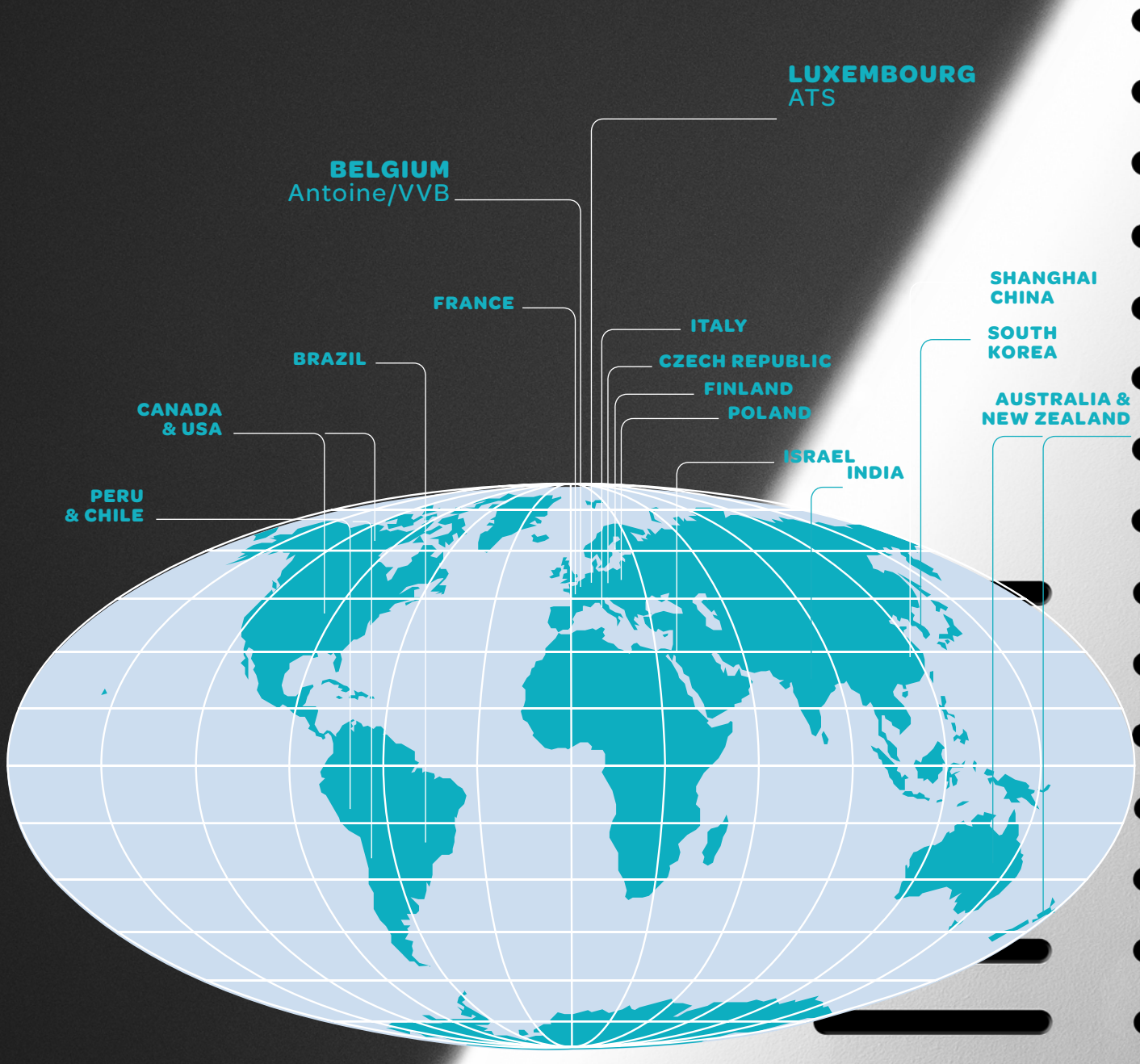
## SERVICE POINTS WORLDWIDE